TELEQUIPMENT

TYPES

D54 & D54R

OSCILLOSCOPE

MANUAL

TELEQUIPMENT

OSCILLOSCOPES

TYPES D54 & D54R

All Telequipment instruments are subject to continuous development and improvement, consequently this instrument may incorporate minor changes in detail from the information contained herein.

TelequipmenT is a registered trade mark of the

TELEQUIPMENT division of TEKTRONIX U.K. LIMITED

313 Chase Road Southgate London N.14 England

Telephone: 01-882 1166 Telex: 262004 Cables: TELEQUIPT LONDON N14

© Copyright

070-0989-01

Issue 3
June 1970

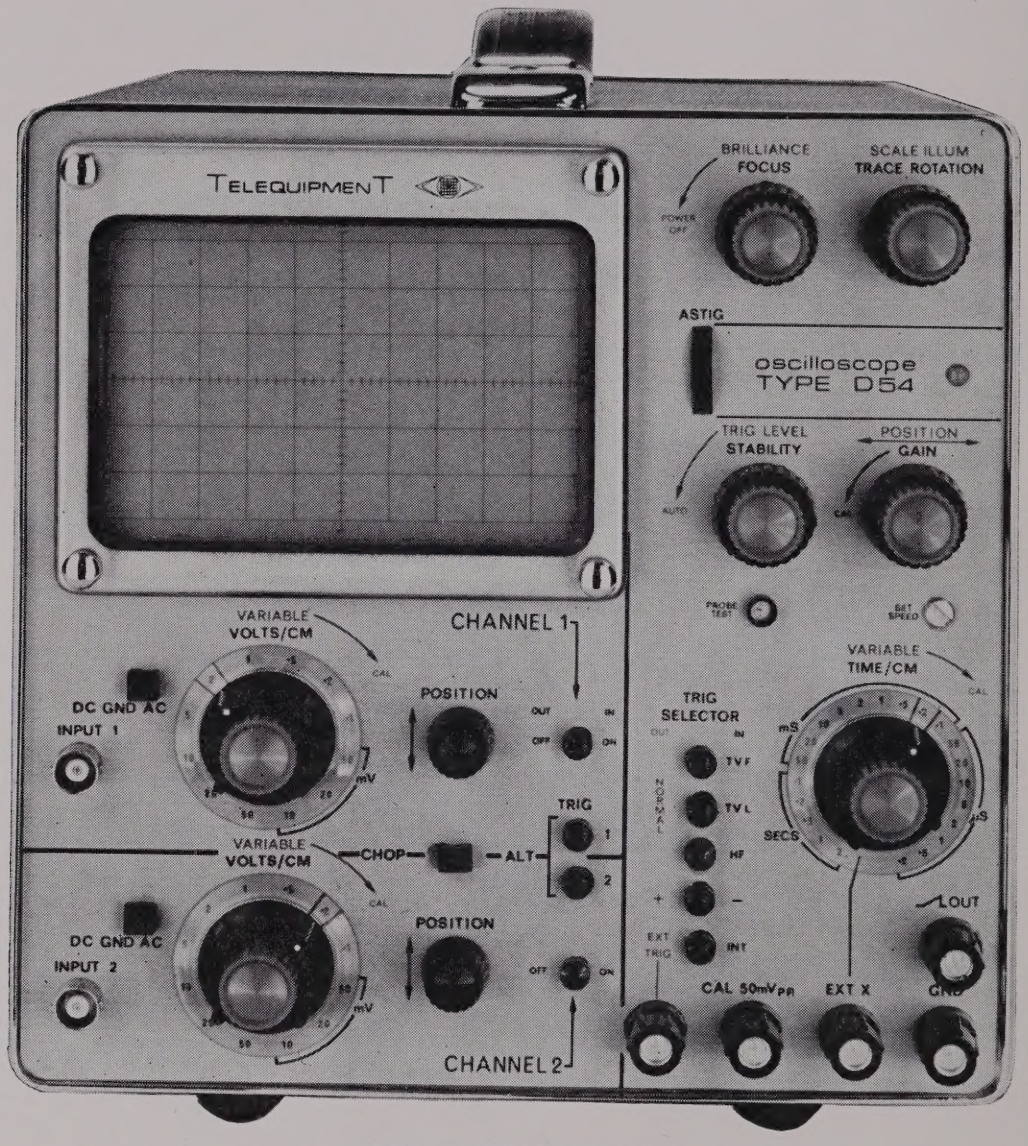

D54 OSCILLOSCOPE

CONTENTS

	Page
Technical Data	2
Operating Instructions	4
Circuit Descriptions	6
Maintenance and Recalibration	10
Component List	14
Mechanical Parts	23
Plate	
D54 Oscilloscope	facing
Circuit Diagrams	
A. Block Diagram	6
1. Attenuator	24
2. Y Amplifier	25
3. Trigger	27
4. Timebase	28
5. Time/cm Switch	29
6. Power Supply and CRT	30

TECHNICAL DATA

VERTICAL AMPLIFIER and ATTENUATOR

Operating modes	Channel 1 only Channel 2 only Alternate — Channel switching during flyback Chopped — Channel switching at 100kHz approx. Automatic blanking
3dB bandwidth — d.c. coupled	d.c. - 10MHz
a.c. coupled	2Hz - 10MHz
10 to 90% risetime	35ns nominal
Calibrated deflection sensitivity ± 5%	10mV - 50V/cm (12 1-2-5 steps)
Variable gain control provides continuous coverage between ranges	
Maximum input (via 400V capacitor a.c. coupled) ...	400Vp
Input impedance approx.	1MΩ & 40pF

HORIZONTAL SYSTEM

Trigger

Internal — Minimum deflection	2mm
Source	Channel 1 Channel 2 Alternate
External — a.c. coupled	1·5Vp-p to ± 15V
Input impedance approx.	100kΩ & 10pF
Useful bandwidth approx.	
Automatic	50Hz - 1MHz
Trigger level	10Hz - 1MHz with 2mm amplitude 1MHz - 4MHz rising to 5mm amplitude
HF	1MHz - 10MHz or better

Sweep generator

Calibrated sweep speeds ± 5%	200ns - 2s/cm (22 1-2-5 steps)
Variable control provides continuous coverage between ranges	
Maximum speed range approx.	40ns - 5s/cm

Horizontal amplifier

3dB bandwidth	d.c. - 1MHz
10 to 90% risetime	350ns nominal
Deflection sensitivity approx.	600mV - 3V/cm
Input impedance approx.	1MΩ & 30pF
Maximum input	400Vp

CATHODE RAY TUBE

Display area	6 x 10cm
Overall post-deflection acceleration	4kV
Available phosphors	P31 (standard), P7 & P11
External intensity modulation	
Coupling	a.c. to first grid
Signal for cut-off at average brilliance	−20Vp approx.
Time constant	10ms approx.

FRONT PANEL OUTPUTS

Calibrator — supply frequency	50mVp-p ± 2%
Sweep sawtooth	
Amplitude	1-35V approx. d.c.-coupled
Minimum load	30kΩ
Probe test	500mV approx.

POWER REQUIREMENTS

Voltage	100 - 125V in 5V steps 200 - 250V in 10V steps
Frequency	48 - 440Hz
Consumption	32VA approx.

PHYSICAL DATA

Approximate overall dimensions and weight:

	High	*Wide*	*Deep*	*Weight*
D54	24·5cm	21cm	44·5cm	9·25kg
D54R	13·3cm	48cm	45cm	11·75kg

Cooling — Convection

Approximate ambient temperature limits:

Operating	−15 to +40°C	+ 5 to +104°F
Non-operating	−25 to +70°C	−13 to +158°F

OPERATING INSTRUCTIONS

FIRST TIME OPERATION

Before connection to the supply, check that the voltage-selector plug is inserted with the pointer indicating the local supply voltage and that the fuse rating is ½A for 100 - 125V or ¼A for 200 - 250V.

The supply lead is alternatively colour-coded as follows:

Line	Brown	Red	Black
Neutral	Blue	Black	White
Earth	Green & yellow	Green	Green

Set controls as follows:

BRILLIANCE	Fully anti-clockwise - OFF
FOCUS	Central
SCALE ILLUM	Central
TRACE ROTATION	Central
ASTIG	Central
TRIG LEVEL	Fully anti-clockwise - AUTO
STABILITY	Fully clockwise
POSITION (horizonal)	Central
GAIN (horizontal)	Fully anti-clockwise - CAL
SET SPEED	As set
VARIABLE	Fully clockwise - CAL
TIME/CM	5ms
TRIG SELECTOR	NORMAL, +, INT (top four buttons out, lowest in)
TRIG	Ch. 1 in, Ch. 2 out
CHANNEL OFF - ON	ON (both channels)
CHOP-ALT	CHOP
POSITION (vertical)	Central (both channels)
VOLTS/CM	50mV (both channels)
VARIABLE	Fully clockwise - CAL (both channels)
DC - GND - AC	DC (both channels)

Link both inputs to CAL 50mVp-p.

Plug in to the supply and switch on by the BRILLIANCE control.

Allow half a minute for the instrument to warm up then turn BRILLIANCE clockwise for a display of convenient intensity.

Separate and centre traces by the vertical and horizontal POSITION controls.

Turn STABILITY anti-clockwise until a stable display is obtained.

Adjust FOCUS and ASTIG for best definition.

On a 50Hz supply, 2½ cycles of the CAL waveform each 1cm in amplitude should now be observed. The instrument is now in a condition for the operator to become familiar with the effect of the controls.

On removal of the CAL to input links, the instrument is set to display most simple waveforms with appropriate adjustment of the switched and variable VOLTS/CM and TIME/CM controls. With the present setting, the timebase is being triggered by Ch. 1.

Although the chopped display mode has been illustrated for the CAL waveform above, it is recommended that the alternate mode is used whenever possible, provided that the sweep speed and signal repetition rate are high enough to avoid a flicker effect. Alternate trace display is obtained by switching CHOP-ALT to ALT.

ADDITIONAL INFORMATION and FACILITIES

In this section, controls are described in the same order as quoted in First-time Operation.

BRILLIANCE varies the intensity of the display as well as serving as the power off-on switch.

FOCUS controls the definition of the display.

SCALE ILLUM enables the intensity of the graticule illuminating lamps to be varied.

TRACE ROTATION twists the CRT beam and varies the alignment of both traces with the horizontal graticule divisions.

ASTIG is used in conjunction with FOCUS for best overall definition.

TRIG LEVEL, when switched to AUTO, enables the time-base to be triggered automatically at the mean level of the waveform. When switched from AUTO the starting point of the sweep may be selected from any point on the positive or negative slope of the displayed waveform; this depends on the setting of the + — TRIG SELECTOR button. TRIG LEVEL should be used to synchronise the display when HF trigger is selected.

STABILITY provides three modes of operation for the timebase: free-running, triggerable and off.

When fully clockwise the sweep will run recurrently with or without a trigger input. This setting should be adopted when using the ramp output at the SAWTOOTH OUT terminal.

When backed-off to the central triggerable zone, the sweep will run in synchronism with trigger signals; this is the usual setting.

When more fully anti-clockwise, the amplitude of pulses from the trigger circuit is inadequate to initiate the sweep.

POSITION (horizontal) displaces the trace in the horizontal axis.

GAIN (horizontal) of the horizontal amplifier is minimum at CAL. Clockwise rotation increases gain by up to about 5 times.

SET SPEED should not be adjusted unless calibrating the sweep speed. The CAL signal may be used to check speed as follows:

Set GAIN fully anti-clockwise, TIME/CM to 10ms and VARIABLE fully clockwise. Link CAL to one vertical channel input and adjust controls for a locked display.

50Hz supply	Adjust SET SPEED for 1 cycle in 2cm.
60Hz supply	Adjust SET SPEED for 3 cycles in 5cm.
400Hz Supply	Switch TIME/CM to 1ms and adjust SET SPEED for 2 cycles in 5cm.

VARIABLE enables sweep speed to be set at intermediate speeds between the TIME/CM calibrations.

TIME/CM selects any of 22 sweep speeds and EXT X. Sweep speed is only calibrated when VARIABLE is fully clockwise **and** GAIN fully anti-clockwise. The EXT X setting enables an external signal to be applied between the EXT X and GND terminals to provide horizontal deflection of the beam. A positive-going signal deflects the spot from left to right.

TRIG SELECTOR

TV F and **TV L** facilitate triggering from TV field (frame) or line pulses. TRIG LEVEL should be switched to AUTO and STABILITY adjusted for sweep to trigger from the back edge of the line or first frame pulse. With large trigger inputs it may be necessary to switch from AUTO and adjust TRIG LEVEL for best results. With these TV trigger settings, polarity relates to the sense of video modulation.

HF should be depressed for triggering from high-frequency signals of up to 10MHz. TRIG LEVEL should be used to lock the display.

+ and — provide triggering from the positive or negative going slope of a waveform.

EXT TRIG and INT provide triggering from an external signal applied between the EXT TRIG and GND terminals or alternatively from either or both vertical channels.

TRIG enables internal triggering to be selected from either or both channels. For triggering from one channel, the appropriately numbered button should be depressed. For mixed triggering from both channels, both buttons should be out and the CHOP-ALT switch set to ALT; the displays require to be partially superimposed.

CHANNEL OFF-ON buttons enable either channel to be switched off, the trace disappearing from the screen. If both channels are switched off, a straight line trace will result which cannot be shifted by either vertical POSITION control. When only one channel is on, the setting of the CHOP-ALT switch is immaterial.

CHOP-ALT determines whether the signals of each vertical channel are successively displayed switched at about 100kHz or at the end of each sweep. The chopped display mode is suitable for the slower sweep speeds while the alternate mode is preferable at higher speeds.

POSITION (vertical) shifts each trace in the vertical direction. When triggering from both channels in the alternate mode, the POSITION controls should be used to bring the traces into coincidence.

VOLTS/CM provides 12 steps of attenuation of each channel's input signal. The calibrated sensitivities are only valid when VARIABLE is fully clockwise at CAL. Calibration of each channel may be checked with the 50mVp-p CAL waveform; if adjustment is required, refer to the Recalibration section.

VARIABLE enables all sensitivities between the calibrated VOLTS/CM steps to be covered. Unless VARIABLE is fully clockwise, the VOLTS/CM indications are uncalibrated.

DC - GND - AC selects the coupling of the input signals. The AC setting will generally be found convenient to block the d.c. content of input signals, but for d.c. voltage measurement or low-frequency signals the DC setting should be used on account of the 2Hz lower 3dB point of the AC coupling. For d.c. blocking at low frequencies a capacitor larger than 0·1μF should be inserted in series with the signal on the DC setting. In the GND position the signal is disconnected and the input of each channel is shorted to chassis; this facility is of use in establishing the 0V d.c. level of a trace.

FRONT AND REAR PANEL CONNECTIONS

EXT TRIG enables an external signal to trigger the time-base when the lowest TRIG SELECTOR button is out.

CAL 50mVp-p provides a 50mVp-p signal accurate to ±2% to enable vertical amplifier gain and timebase sweep speed to be checked.

EXT X provides d.c.-coupled access to the input of the horizontal amplifier. This facility is of use with Lissajous and swept-frequency techniques. If a dual trace display is required the chopped display mode should be selected. The alternate mode will only provide one trace, since no channel-switching pulses are being fed from the sweep-gating bistable to the channel-switching multivibrator.

GND is connected to the chassis of the instrument.

SAWTOOTH OUT provides the positive-going ramp waveform produced by the sweep generator. STABILITY should be advanced fully clockwise when a continuously repetitive sawtooth is required. The input resistance of any applied load should exceed 30kΩ to prevent overloading the sweep generator. The output is d.c. coupled with an amplitude from 1 to 35 volts approximately.

PROBE TEST A positive going pulse enables the capacitance of a high-impedance probe to be matched to that of a vertical amplifier channel. Details of probe compensation are given in the Recalibration section.

Z MOD socket at rear of instrument permits intensity modulation of both traces simultaneously; a positive signal intensifies the trace, a negative signal blanks it.

CIRCUIT DESCRIPTIONS

BLOCK DIAGRAM — Figure A

ATTENUATORS The signals to be observed are applied via the BNC input sockets to each attenuator. These either pass the signals directly to the input amplifiers or reduce the amplitudes to a convenient level.

Y INPUT AMPLIFIERS Depending on the condition of the channel-switching multivibrator, the output of either amplifier is fed to the Y output amplifier. On internal trigger a portion of either amplifier's output may be fed to the trigger circuit.

CHANNEL-SWITCHING MULTIVIBRATOR This stage provides the switching potentials to determine which of the input amplifiers drives the output amplifier at any given time. In the alternate mode, a gating pulse from the sweep-gating bistable switches the multivibrator; each amplifier is switched on for every alternate sweep. In the chopped mode the multivibrator free-runs and switches each amplifier on and off at intervals of about 5μs. Pulses are provided to blank the CRT beam during switching.

Y OUTPUT AMPLIFIER The output from either input amplifier is further amplified and fed directly to the CRT Y plates. A portion of this output may be fed to the trigger circuit to enable the timebase to be triggered by each channel's output alternately.

CALIBRATOR A 50mVp-p squarewave at power-line frequency provides a means of checking Y amplifier and timebase calibration.

TRIGGER The circuit provides pulses of suitable amplitude and polarity to trigger the sweep-gating bistable from internally or externally derived waveforms.

SWEEP-GATING BISTABLE This operation of this stage determines the start and finish of each sweep. Suitable potentials are applied to the unblanking amplifier and channel-switching multivibrator to provide beam-unblanking during the sweep and channel-switching at the end of each sweep in the alternate mode.

SWEEP GENERATOR A sawtooth waveform is generated which is passed to the X output amplifier and a front-panel terminal. In the external X condition, the stage serves as the X input amplifier.

X OUTPUT AMPLIFIER The sweep sawtooth or external X signal is amplified and fed in push-pull to the CRT X plates.

UNBLANKING AMPLIFIER The beam-unblanking pulses from the sweep-gating bistable are amplified and applied to a CRT electrode to deflect the beam on to the tube phosphor for the duration of a sweep and when the TIME/CM switch is set to EXT X. Pulses are fed from the channel-switching multivibrator to blank the beam when the multivibrator changes state in the chopped mode.

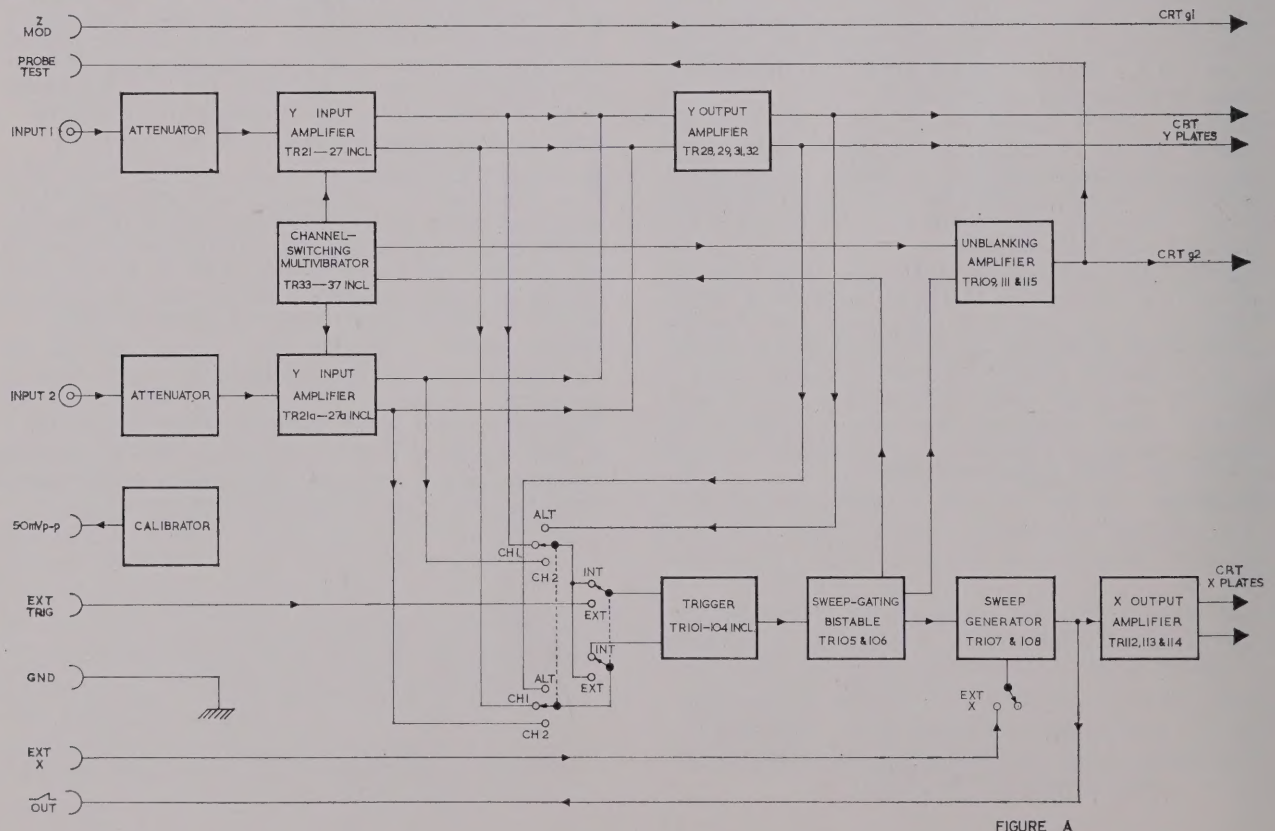

FIGURE A

DETAILED DESCRIPTIONS

ATTENUATORS — Figure 1

The two identical attenuators each comprise four frequency-compensated resistive dividers which are switched singly or in tandem to provide the required division ratios. CV2, 5, 8 & 12 enable the input time-constants to be standardised; CV4, 7, 11 & 14 compensate their respective dividers.

VERTICAL AMPLIFIER — Figure 2

The circuit of only the channel 1 input amplifier is treated in detail, the circuit of channel 2 being identical.

The output from the attenuator is fed onto the gate of TR22, an N-channel field-effect transistor. TR22 & 23 form a paraphase amplifier with their sources long-tailed through TR21. The base of TR21 is held at about half the −12V line potential by D21; this causes amplifier gain to vary in direct proportion to small changes in supply voltage and so compensate for the resulting inversely proportional changes in CRT deflection sensitivity. The stabilised voltage established by D21 is fed to RV469 of the calibrator (Figure 6).

R21, 22, 23 & 24 and CV21 & C22 serve to protect TR22 against overload, CV21 & C22 compensating the divider. VARIABLE, RV34, alters the gain of TR22 & 23 by a factor of at least 2·5. Variations in input capacitance of TR22 with change of gain are compensated for by CV24. RV32 is set to equalise the source currents of TR22 & 23 irrespective of the setting of RV34. RV36 compensates for resistor tolerances and differences in gm of the FET's which would otherwise cause unbalanced outputs at the drains of TR22 & 23.

Shift voltage is applied to the gate of TR23; RV28 serves as a shift-centring adjustment. The supply to the POSITION controls is stabilised by D22 & 23.

The output at the drains of TR22 & 23 is fed to the bases of TR24 & 25. The gain of the channel is set by RV44. CV25 & 26 neutralise the feedback capacitance of TR24 & 25. D24 serves to maintain a constant relationship between mean Y plate and CRT third anode potentials in spite of supply voltage fluctuations; this prevents loss of astigmatism. D24 also provides a stable 3·3V supply to TR36, 37 & 38 and a supply to TR35.

From the collectors of TR24 & 25 the signal is taken to the bases of TR26 & 27. These provide current drive for TR28 & 29 when series diodes D25 & 28 are conducting; alternatively when D25A & 28A are conducting the channel 2 signal is fed to TR28 & 29. Only one pair of series diodes conduct at any one time depending on the condition of multivibrator TR33 & 34.

Whichever channel's signals are applied to the bases of TR28 & 29 are then fed to the bases of TR31 & 32, the output stage. The single pair of CRT Y plates are driven directly from the collectors. CV32 & RV64 provide high-frequency compensation.

Five channel-switching combinations are possible with the push-button switches S21 & 22 and the slider switch S23. A table follows showing the states of the relevant components.

Channels:	1 on, 2 off	1 off, 2 on	1 & 2 alternate	1 & 2 chopped	1 & 2 off
S21 a & b	Open	Closed	Open	Open	Closed
c	Closed	Open	Closed	Closed	Open
S22 a & b	Closed	Open	Open	Open	Closed
c	Open	Closed	Closed	Closed	Open
S23 a & b	Either	Either	Closed	Open	Either
Multivibrator					
TR33	Off	On	Off - On	Off - On	Off
TR34	On	Off	On - Off	On - Off	Off
Shunt diodes					
D26 & 27	Off	On	Off - On	Off - On	On
D26A & 27A	On	Off	On - Off	On - Off	On
Series diodes					
D25 & 28	On	Off	On - Off	On - Off	Off
D25A & 28A	Off	On	Off - On	Off - On	Off

Channels 1 on, 2 off Only the output of TR26 & 27 may pass to TR28 & 29; the output of TR26A & 27A is short-circuited by D26A & 27A.

Channels 1 off, 2 on Only the output of TR26A & 27A may pass to TR28 & 29; the output of TR26 & 27 is short-circuited by D26 & 27.

Channels 1 & 2 alternate D29 & 31 conduct, effectively short-circuiting the emitters of TR33 & 34. TR35, in series with TR33 & 34, is cut off at the end of each timebase sweep by a signal derived from the sweep-gating bistable; this causes TR33 & 34 to change state once each sweep during the flyback period and so alternately switch the outputs of channels 1 & 2 on to TR28 & 29.

To provide channel-switching in the alternate mode, the waveform at the emitters of TR105 & 106 (Figure 4) is applied via C44 to the base of TR38; here the waveform is differentiated and used to switch over TR38 & 37.

TR37 & 38 form a collector-coupled monostable with TR38 normally off and TR37 on. The negative-going pulses at the base of TR38 turn TR38 on and TR37 off for a period determined by the time-constant of C43 & R84; the monostable then resets to TR37 on and TR38 off. A negative-going rectangular pulse is produced at the collector of TR37 which is differentiated by C42 & R82. The positive-going spike is amplified and inverted by TR36 and applied to the base of TR35; this cuts off and causes the multivibrator TR33 & 34 to change state. As TR33 & 34 switch, so the signal from the other vertical channel is switched onto the Y output amplifier.

Channels 1 & 2 chopped D29 & 31 are cut off and

TR33 & 34 is converted from a bistable to an astable multivibrator which free-runs at about 100kHz. The outputs of channels 1 & 2 are thus successively switched on to TR28 & 29 at a 100kHz rate.

At each transition of TR33 & 34, a pulse is fed from the emitters via C36 & 37 to TR115 in the unblanking amplifier to blank the CRT beam. This provides automatic transient blanking in the chopped mode.

Channels 1 & 2 off The output of neither TR26, 27 nor 26A, 27A can pass to TR28 & 29. To maintain the quiescent operating conditions of the output stages, the emitters of TR28 & 29 are returned to chassis through R55.

The two TRIG buttons S24 a & b provide three modes of internally triggering the sweep:

Channel 1 The trigger signal is taken from the emitters of TR26 & 27 and passed to TR39 & 41 via S24a. CV28A is switched between the emitters of TR26A & 27A by S24b to provide capacitive loading equivalent to that of the trigger amplifier.

Channel 2 The trigger signal is taken from the emitters of TR26A & 27A and fed to TR39 & 41 via S24b. CV28 is switched between the emitters of TR26 & 27 by S24a.

In both these settings the second pair of contacts of S24a & b prevent any trigger signal being taken from TR31 & 32.

Channels 1 & 2, alternate With both buttons out, the signal developed across R66 & 67 in the collector loads of TR31 & 32 is passed to the trigger amplifier TR39 & 41. CV28 & 28A are switched between the emitters of TR26 & 27, 26A & 27A respectively.

TRIGGER CIRCUIT — Figure 3

The bases of input amplifiers TR101 & 102 are fed with the triggering signal via switches S101e & d. S101e selects the source, either the vertical amplifier for internal operation or the EXT TRIG terminal, while S101d determines the slope on which triggering occurs.

When switched in by S102, RV115, the TRIG LEVEL control, varies the base potentials of TR101 & 102 in anti-phase. This alters the quiescent voltage on the base of TR103 and so varies the d.c. level of signal necessary to trip the Schmitt trigger formed by TR103 & 104.

With S102 switched to AUTO, feedback is applied from TR104 collector to TR102 base via R124 & 122 and from TR103 collector to TR101 base via R125 & 106. This causes TR101 & 102 to oscillate at a frequency in the order of 50Hz determined by C108, R124 & 125. The amplitude of the free-running output of TR102 is adjusted by the trigger sensitivity pre-set RV132 which adjusts the hysteresis gap of the Schmitt. Set automatic pre-set RV114 is adjusted to take up component inequalities and provide symmetric operation of TR101 & 102.

The feedback networks R108, 109, C104, 105 and R118, 119, C106, 107 extend the frequency response of the amplifier.

With S101a, b & c in the NORMAL position, TR103 & 104 operate as a Schmitt trigger with coupling resistor R131 and speed-up capacitor C111. RV132 adjusts the hysteresis gap or degree of backlash. The fixed-amplitude rectangular-wave output from the collector of TR104 is differentiated by C113 and R137 and the resulting bidirectional pulses applied to series clipper D101 which provides the collector of TR105 in the timebase circuit with positive-going trigger pulses.

In the TV positions of S101a & b, TR103 is converted into a sync separator by R127 being switched out of circuit and C109 being switched across R128 to give a 350ms time constant. TR104 changes into an inverter with decoupling capacitor C114 being switched across R133. In the TV FIELD position the differentiating time-constant of C113 and R137 is increased by the addition of R136.

With S101c in the HF position, R130 is placed in series with RV132 across C112, these components together with TRIG LEVEL determine the frequency at which TR103 & 104 oscillate. The frequency varies from approximately 250kHz to 1MHz.

TIMEBASE — Figures 4 & 5

The sweep generator consists of the Miller run-up stage TR108 with TR107 as a source-follower; TR105 & 106 form the sweep-gating bistable; TR112 drives the paraphase X output stage TR113 & 114, while TR109, 111 & 115 constitute the beam-unblanking amplifier.

In the quiescent condition of the timebase TR105 is off and TR106 on. D105 & 106 are on holding CT, the timing capacitor (selected by S276 2F), discharged between the gate of TR107 and the collector of TR108. TR108 conducts heavily, with its collector clamped by D105 close to chassis potential. TR109 is on, causing g2 of the CRT to be biased negatively to a1, thus deflecting and blanking the electron beam.

When a positive-going trigger pulse is applied to the base of TR106 via D101, C116 & R152, the bistable switches over; TR106 goes off and TR105 on. The collector of TR106 goes negative until clamped by D104 at about chassis potential; D105 & 106 are cut off and current flows into CT through RT (selected by S276 1R) and RV276 to start the sweep.

The gate of TR107 and base of TR108 gradually fall, causing the collector of TR108 to rise and provide the positive-going sweep. The tendency of the gate of TR107 to go negative is limited by the large loop gain giving almost constant current flow into CT.

As the collector of TR108 rises, D103 is turned on and CH, the hold-off capacitor (selected by S276 1F), charges; D102 becomes reverse-biased and cuts off. The rise in voltage across CH is applied to the base of TR105 via R146; at a point determined by the setting of RV149, TR105 & 106 switch over with TR105 off and TR106 on. The sweep ends and the flyback begins.

The waveform at the emitters of TR105 & 106 is fed to C44 (Figure 2), where it is shaped and amplified and used to switch over the channel-switching multivibrator during the flyback period at the end of each sweep.

D106 is turned on and CT discharges through TR106 causing the gate of TR107 and base of TR108 to rise.

The collector of TR108 falls linearly, due to a reversal of the Miller action that took place during the sweep, until D105 comes on and the flyback ends, the collector of TR108 being clamped by D105 at the same level as at the start of the sweep. During the flyback D103 is turned off and CH starts to discharge, taking the base of TR105 in a negative direction.

A trigger pulse occuring during the hold-off period cannot cause a repetition of the above sweep and flyback cycle until the hold-off capacitor has discharged sufficiently to turn on D102 and clamp the base of TR105 at a potential set by RV142. If this potential is too high, as when the STABILITY control is anti-clockwise, an incoming trigger pulse is of insufficient amplitude to switch over the bistable. If STABILITY is advanced, the base potential of TR105 falls and the bistable can be switched. When STABILITY is advanced still further clockwise, the base of TR105 falls sufficiently to turn off TR105 and cause a recurrent sweep whether or not trigger pulses are applied. RV144 is set to make the hold-off time twice as long as the flyback time in the free-running condition.

TR109 is switched off at the start and on at the end of the sweep as TR105 & 106 change state. D107 clamps the emitter of TR109 at about chassis potential. As the collector of TR109 goes respectively positive and negative, so does g2 of the CRT, by coupling through the emitter-follower TR111; this causes the CRT electron beam to be alternately unblanked and blanked. A fast-edged pulse is available from a tapping on the emitter load of TR111 for probe capacitance compensation.

On EXT X, the beam is unblanked by disconnecting the base of TR105 from D102, this causes the bistable to switch and cut off TR109.

As the vertical amplifier channel-switching multivibrator TR33 & 34 switches, positive-going pulses are fed from C26 & 27 to the base of TR115. The resulting negative-going pulses at the collector are applied to the base of TR111 via D111. This drives the emitter of TR111 and g2 of the CRT in a negative direction and so blanks the beam, suppressing the display of switching transients in the chopped mode.

The external horizontal signal is applied via R293 to the gate of TR107, which with TR108 forms an operational amplifier with feedback through R287. RV155 is set to produce zero volts at the input terminal while CV291 compensates for the input capacitance of TR107.

The sawtooth or external X signal at the collector of TR108 is applied via RV159 & R163 to the base of TR112, an operational amplifier, where it is mixed with the shift potential from RV166. D108 limits the negative excursion of the base of TR112. The gain of TR112 is controlled by RV169 in the feedback loop from collector to base.

The output at the collector of TR112 is applied to the base of TR113, which with TR114 drives the X-plates in push-pull. D109 prevents TR113 from bottoming thus reducing hole storage; RV178 sets the mean operating point of the collectors of TR113 & 114 at about half the HT voltage; RV182 balances the currents in the two transistors when there is no potential across RV169.

POWER SUPPLY AND CRT CIRCUIT — Figure 6

Power Supplies

All voltages are derived from the power transformer T401 which has two primary and two secondary windings. The primaries are connected in parallel for operation from 100 - 125V and in series for operation from 200 - 250V. A tapped secondary provides all EHT, HT & LT supplies with the exception of the CRT heater which is separately fed from a 6·3V winding floated at about −1kV.

EHT The positive supply for the CRT PDA helix is obtained from D401 & 403 which form a voltage-doubling circuit with C401, 403 & 404; the supply is filtered by R403 & C406.

The negative supply for the electron gun is provided by D404, 405 & 407 in series; C409, 411 & 412 in series form the reservoir capacitor.

HT D408, acting as a half-wave rectifier, provides the +105V supply for RV300, the Y amplifier and timebase circuits; after decoupling by R170 & C122 (Figure 4) the supply is returned to RV301 and a1 of the CRT.

LT The positive and negative lines are obtained from D406 and D402 respectively. The 13·5V transformer tapping also supplies the power on lamp, the scale illumination lamps via RV401 and the calibrator circuit via R402. The −12V A line feeds the timebase and trigger; after additional filtering by L452 & C476, the −12V B line feeds the timebase and Y amplifier.

The 50mVp-p squarewave calibrator output is developed across R467 by using the 13·5V a.c. output from the power transformer to switch D412 alternately on and off. D412 is in series with the divider chain RV469, R468 & 467 between the −6·2V line and chassis; RV469 is used to set the current through the chain and consequently the voltage developed across R467.

CRT

A 13-centimetre diagonal rectangular tube with helical PDA is used; alternatives to the standard P31 phosphor are available. Beam control is carried out electrostatically with the exception of rotation which is magnetic. The front-panel controls RV305, 303 & 301 adjust for brilliance, focus and astigmatism on g1, a2 & a3 respectively. D301 provides a low-resistance path for cathode current.

The current through the trace rotation coil L453 is adjusted by RV465; if necessary, the direction of current may be reversed by reversal of the connecting plug.

Except for the duration of chopped mode switching transients, the beam is unblanked during a sweep and when the timebase is switched to EXT X; this is achieved by raising the potential on g2 to that of a1. At all other times g2 is held negative to a1, so deflecting and blanking the beam.

External intensity modulating signals are applied to g1 via C306.

MAINTENANCE AND RECALIBRATION

GENERAL

The entirely solid-state design of the instrument should render frequent readjustment of the internal preset controls unnecessary; however, to ensure the maintenance of full measurement accuracy, it is desirable to make an occasional check on the vertical amplifier sensitivity and the timebase sweep speed. The internally generated 50mVp-p calibration waveform may conveniently be used for these checks.

The procedure for checking sweep speed is detailed in the Set Speed section of Operating Instructions. Vertical amplifier gain may be checked as follows:

Remove left-hand cabinet side as described in the following Mechanical section.

Set each channel's VOLTS/CM and VARIABLE controls fully clockwise, to 10mV and CAL respectively, and their DC-GND-AC switches to DC.

Apply the 50mVp-p CAL waveform to INPUT 1 and adjust position, trigger and sweep controls for a convenient display.

Adjust RV44 Set Gain for 5cm amplitude.

Remove CAL from INPUT 1, apply to INPUT 2 and adjust controls as necessary for a display triggered by Channel 2.

Adjust RV44A Set Gain for 5cm amplitude.

NOTE: The VARIABLE gain controls must remain fully clockwise.

Should a more complete recalibration be required, such as in the event of transistor replacement, reference should be made to the appropriate procedure in the Recalibration part of this section. It should be noted that TR22 with TR23 and TR22A with TR23A are matched pairs.

Before it is assumed that a fault condition exists, control settings should be verified with reference to the First-time Operation section.

MECHANICAL

Location of preset controls With the exception of CV28 & 28A (accessible from beneath), attenuator and vertical amplifier preset controls with circuit references numbered below 100 are accessible from the left-hand side. The remainder of the presets, referenced above 100, are accessible from the right-hand side of the instrument.

Access to Interior To remove the cabinet sides, loosen the two handle-clamp securing screws, ease the top of each side outwards and unhook the bottom of each side from the locating slots in the chassis base.

The chassis base cover plate requires to be removed for access to CV28 & 28A; it is secured by six fixing screws, one at each corner and one half-way along each side.

CRT removal and replacement Remove both cabinet sides, as described above, and the rear cover; this is secured by a screw at each corner. Unplug the PDA connector, the 12-pin base socket and the trace rotation coil plug, the last from the right-hand circuit board. Supporting the CRT assembly, unscrew the gun-shield clamp and remove the mumetal screen earthing lead. Slide the tube assembly rearwards until the front of the CRT is disengaged from the support cushions. Swing the front of the assembly outwards and withdraw the whole assembly from the instrument. Slide off the shields and trace rotation coil.

For CRT replacement, follow the above procedure in reverse. If the TRACE ROTN control does not provide an adequate range of adjustment, reverse the trace rotation coil plug.

RECALIBRATION

The following procedures will enable the performance of the individual sections of the instrument to be optimised in the event of malfunction of any section. The procedures are not necessarily in the correct sequence for a complete calibration; regard should be paid to possible interaction of adjustments with the performance of other circuits.

PROBE

Waveform required 0·5Vp-p 1kHz squarewave or step waveform from PROBE TEST front-panel outlet.

Compensation Connect x10 probe to INPUT socket, apply tip to 0·5Vp-p- squarewave source or PROBE TEST. If the squarewave is used, adjust controls to display a few cycles of the waveform. Set VOLTS/CM to 10mV and adjust probe trimmer for square corners. The compensation should be rechecked if the probe is transferred to the other channel.

A sweep speed of 1ms/cm is recommended when using the PROBE TEST output; the leading corner of the step waveform should be adjusted for optimum squareness, that is for the starting point to be level with the rest of the trace.

The HZ1B probe trimmer has a screwdriver adjustment through a hole in the probe body.

To compensate the type GE81000 probe, slacken the narrower of the two knurled rings at the oscilloscope end of the probe lead and rotate the adjacent broader ring until correct compensation is obtained. Tighten the narrower ring, ensuring that the setting of the broader ring is not disturbed.

VERTICAL AMPLIFIER

Since Channel 2 input amplifier is identical to Channel 1, details of adjustments to Channel 1 only are given in full. If a complete recalibration of the vertical amplifier is being carried out, it is initially desirable to set RV28, 28A, 32, 32A, 36, 36A, 44 & 44A to mid-position and CV24, 24A, 25, 25A, 26 & 26A to minimum capacity (plates fully out of mesh). If only minor adjustments are being performed, presets should be left initially as found.

Equipment and waveforms required d.c. voltmeter, 20kΩ or better, to measure 1·2V.

50 & 100mV 1kHz squarewave.

100kHz fast-rise squarewave with risetime of 5ns or less and amplitude of about 30mV; a termination to match the output impedance of the fast-rise squarewave generator is also required.

Set TR35 Emitter Voltage RV52 Switch on Channel 1 only and select Channel 1 TRIG button.

Switch both channels DC-GND-AC switches to GND.

Connect voltmeter between emitter of TR35 and chassis, voltmeter positive to emitter, and adjust RV52 for a reading of about 1·4V.

This control is common to both channels, so does not require any further adjustment when carrying out the Channel 2 procedure.

Variable Balance RV32 Centre trace with POSITION control and RV28 if necessary.

Adjust RV32 for no trace movement as VARIABLE is turned alternately fully clockwise and anti-clockwise centring trace with POSITION control.

Y Balance RV36 Adjust RV36 for no trace movement as R461 is short-circuited. R461 is located about 10cm from the front and 4cm from the bottom of the PC70D circuit board, adjacent to RV469.

Recheck the setting of RV32 as in the previous step.

Set Gain RV44 With VARIABLE fully clockwise switch VOLTS/CM to 10mV, DC-GND-AC to DC and feed in accurate 50mVp-p squarewave.

Adjust RV44 for precisely 5cm between the flat portions of the squarewave.

Position Balance RV28 Set VARIABLE fully anti-clockwise and adjust RV28 so that POSITION control enables the trace to be shifted equally either side of the graticule centre-line.

Recheck adjustment of Variable Balance RV32 for no trace shift as VARIABLE is rotated.

Input Capacitance CV21 Set VARIABLE fully clockwise, VOLTS/CM to 10mV and apply 50mVp-p 1kHz squarewave.

Adjust CV21 for square leading corners on display.

Input Neutralising CV14 & 24 With VARIABLE fully clockwise, set VOLTS/CM to 20mV and apply 100mVp-p 1kHz squarewave.

Adjust CV14, 20mV attenuator trimmer, for square corner.

Turn VARIABLE fully anti-clockwise and adjust CV24 for square corner.

Continue adjusting CV14 with VARIABLE clockwise and CV24 with VARIABLE anti-clockwise until rotation of VARIABLE causes no change in the shape of the corner.

Switch Channel 1 off, Channel 2 on and repeat the foregoing procedures for Channel 2 adjusting the equivalently-numbered preset components with letter suffix 'A'. RV52 requires no further adjustment.

Similar attenuators are incorporated in both channels; the following compensation procedure should be carried out for each attenuator.

Waveform required 1kHz squarewave adjustable between 0·1 and 5Vp-p or 0·1 and 50Vp-p with probes.

Compensation Set each channel's VARIABLE control fully clockwise and adjust the trimmers of each attenuator in turn for square corner. The following VOLTS/CM switch settings and input signal levels should be used:

	Squarewave	
VOLTS/CM	*Vp-p*	*Adjust*
20mV	·1	CV14
50mV	·25	CV11
·1	·5	CV7
·2	1	CV12
·5	2·5	CV8
1	5	CV4

If a x10 probe is available, connect the correctly compensated probe to each INPUT in turn, apply probe tip to squarewave source and adjust trimmers as before.

	Squarewave	
VOLTS/CM	*Vp-p*	*Adjust*
·1	5	CV5
1	50	CV2

HF Compensation RV64, CV32, 25, 26, 25A & 26A Triggering from Channel 1 (upper TRIG button in), set both VOLTS/CM switches to 10mV and apply about 30mVp-p from correctly terminated 100kHz fast-rise squarewave generator to INPUT 1.

Starting with RV64 clockwise, progressively adjust CV32 and RV64 in turn for square corner. RV64 should be backed-off anti-clockwise as far as possible consistent with good corner.

Adjust C25 & 26 successively for best corner; after adjustment the settings of CV25 & 26 should be approximately similar.

Note the shape of the resulting corner.

Apply 100kHz squarewave to INPUT 2 and trigger from Channel 2 (lower TRIG button in).

Adjust CV25A & 26A successively for best corner; as with CV25 & 26, CV25A & 26A should end up with approximately similar settings.

Note the shape of the resulting corner.

CV25, 26, 25A & 26A should now be adjusted to provide the same pulse-response from both channels by carrying out the above procedures in turn; the alternate trace trigger setting (both TRIG buttons out) should not be used at this stage.

Recheck the settings of RV64 and CV32.

Channel 1 Alternate Trigger Compensation CV28 Feed 30mV 100kHz squarewave into INPUT 1 and switch to alternate trace trigger (both TRIG buttons out). Adjust CV28 for same response as obtained on Channel 1 trigger (upper TRIG button in).

CV28 & 28A are mounted on the circuit board behind the channel OFF-ON and TRIG buttons. CV28 is the further to the rear of the two trimmers.

Channel 2 Alternate Trigger Compensation CV28A Feed 30mV 100kHz squarewave into INPUT 2 and switch to alternate trace trigger (both TRIG buttons out).

Adjust CV28A for same response as obtained on Channel 2 trigger (lower TRIG button in).

TRIGGER

Equipment required Test oscilloscope to measure 0·1V at about 10ms/cm sweep speed.

Trigger sensitivity and Set Automatic RV132 & 114 With no inputs, switch TRIG LEVEL to AUTO, turn STABILITY fully anti-clockwise, switch to EXT TRIG (lowest button out) and short EXT TRIG terminal to GND.

Set the test oscilloscope to 0·1V/cm a.c. coupled and 10ms/cm.

Inspect the waveform at the base of TR103 (this is the same point as the right-hand end of R119 and the left-hand ends of R117 & 126). Adjust RV132 for amplitude and RV114 for symmetry to produce a symmetrical 0·1Vp-p triangular waveform.

The settings of RV114 & 132 are critical, so in the case of serious maladjustment, carry out the following procedure:

Set RV114 to mid-position and RV132 fully anti-clockwise. Adjust RV114 to the centre of the range over which either a triangular waveform or a continuous HF oscillation is obtained; if the latter, gradually adjust RV132 to the point where the oscillation is replaced by a triangular waveform. If the triangular waveform is not obtained, repeat the above with a different setting of RV114. Finally adjust RV114 & 132 for a symmetrical triangular waveform 0·1V in amplitude.

SWEEP GENERATOR

Equipment and waveforms required Test oscilloscope to measure 36V at about 1ms/cm. 10kHz squarewave or 0·1ms markers. 1MHz squareware or 1μs markers. The squarewave or marker frequencies should be crystal controlled.

Hold-off Time and Trace Length RV144 & 149 With no vertical input, set TIME/CM to 0·5ms, VARIABLE and TRIG LEVEL fully clockwise, horizontal GAIN and RV144 fully anti-clockwise and STABILITY about 45 degrees from fully clockwise.

Set the test oscilloscope to 10V/cm and 1ms/cm.

Inspect the waveform at the SAWTOOTH OUT terminal and turn RV144 clockwise until timebase just starts. Set the amplitude of the sawtooth to about 36V with RV149.

If the waiting time (horizontal element of display) is less than a quarter of the flyback time (negative-going slope of display), turn STABILITY fully clockwise and set waiting time to equal a quarter of the flyback time with RV144.

If the waiting time is greater than the flyback time, turn RV144 clockwise until the times are equal.

Check that there is waiting time on the 50μs, 5ms and 50ms positions of the TIME/CM switch; if not, readjust RV144.

Set Speed 0·2ms and Trace Length SET SPEED & RV149 With horizontal GAIN fully anti-clockwise and VARIABLE fully clockwise, set TIME/CM to 0·2ms and apply a 10kHz squarewave or 0·1ms markers to one vertical channel INPUT. Adjust amplitude and VOLTS/CM for about 3cm of display.

Adjust SET SPEED for 2 cycles/cm or markers/cm over the centre 8cm of graticule divisions; timing over the first and last centimetre should be ignored.

Adjust RV149 for about 11cm of trace length.

Set Speed 0·2μs CV283 With horizontal GAIN fully anti-clockwise and VARIABLE fully clockwise, set TIME/CM to 0·2μs and apply 1MHz squarewave or 1μs markers to one vertical INPUT. Adjust CV283 for 1 cycle or marker/5cm, between the 3rd and 8th vertical graticule divisions. CV283 is mounted between the TIME/CM switch wafers.

HORIZONTAL AMPLIFIER

Equipment and waveforms required 20kΩ/V or higher resistance voltmeter to measure approximately 105V. 10kHz squarewave of about 2·5Vp-p.

Mean X plate Potential RV178 Set TIME/CM to EXT X, VARIABLE fully clockwise, horizontal GAIN fully anti-clockwise and centre spot(s) with POSITION control(s).

(a) Connect voltmeter between collectors of TR113 & 114 and adjust horizontal POSITION for 0V.

(b) Measure and note voltage of +105V line.

(c) Connect voltmeter, on same range as +105V line measurement, between TR114 collector and chassis and adjust RV178 for half the +105V line voltage plus 2·5V (nominally, 105/2 + 2·5 = 55V).

(d) Repeat (a), (b) and (c) until correct adjustment is obtained.

X d.c. Balance RV182 Centre spot with horizontal POSITION and adjust RV182 so that no spot movement results when rotating horizontal GAIN between its limits.

Check and if necessary adjust mean X plate potential as in previous step.

EXT X d.c. Balance RV155 Turn horizontal GAIN fully clockwise and adjust RV155 for no spot movement when EXT X terminal is shorted to GND.

EXT X Input Compensation CV291 With no Y input, turn horizontal GAIN fully clockwise and apply a 2·5V 10kHz squarewave between the EXT X and GND terminals.

Adjust CV291 for no under-or overshoot, i.e., intensified spots of minimum dimensions at each end of the trace.

CATHODE RAY TUBE

Inter-plate Shield Potential RV300 Select either vertical channel and set TIME/CM to 0·5ms and STABILITY fully clockwise. Centre trace with POSITION control and adjust TRACE ROTN for alignment of trace with graticule.

Adjust RV300 for minimum curvature of the trace when positioned to the top and bottom of the screen.

POWER SUPPLY

Waveform required 50mVp-p squarewave accurate to within ±2%, any frequency between 50Hz and 1kHz.

Set 50mVp-p Calibrator RV469 Do not adjust RV469 unless squarewave amplitude is accurate to within ±2%.

Display 50mV squarewave generator waveform on one vertical channel with VOLTS/CM set to 10mV and VARIABLE fully clockwise.

(a) Note precisely the amplitude of the display.

(b) Remove generator squarewave and link INPUT and CAL 50mVp-p terminals.

(c) Adjust RV469 for exactly the same amplitude of display as noted at (a) above.

COMPONENT LIST

Except for RV115, 142, 301, 303, 305, 401, 465 and S102, 402, the D54 and D54R use the same components. Circuit references suffixed with the letter R denote parts used in the D54R only.

All resistor and capacitor values are in ohms and microfarads unless otherwise stated; ratings in watts and volts respectively are at 70°C.

Carbon resistors are 10% and $\frac{1}{4}$W unless otherwise shown.

Whenever possible exact replacements for components should be used; these may be ordered from the company or its agents stating:

1. Instrument type.
2. Instrument serial number.
3. Component circuit reference.
4. Component part number.
5. Component value.

Locally available alternatives may be satisfactory for standard components.

ABBREVIATIONS

C	Carbon composition	MO	Metal oxide
CER	Ceramic	PE	Polyester
CM	Cermet thick-film	PP	Polypropylene
CP	Carbon preset	PS	Polystyrene
CT	Ceramic trimmer	Se	Selenium
CV	Carbon variable	Si	Silicon
E	Electrolytic	SM	Silver mica
Ge	Germanium	WWP	Wire-wound preset
HS	High stability carbon	WWV	Wire-wound variable

TELEQUIPMENT division of TEKTRONIX U.K. LIMITED

313 Chase Road Southgate London N.14 England

Telephone: 01-882 1166 Telex: 262004 Cables: TELEQUIPT LONDON N 14

Cct. ref.	Part number	Value	Description	Tol. %	Rating
*C1	285-0772-00	0·1	PE	10	400
*CV2	281-0145-00	6-25p	CT		500
*C3	285-0810-00	820p	PS	5	125
*CV4	281-0136-00	3-10p	CT		250
*CV5	281-0145-00	6-25p	CT		500
*C6	285-0869-00	47p	PS	2p	350
*CV7	281-0136-00	3-10p	CT		500
*CV8	281-0145-00	6-25p	CT		500
*C9	285-0842-00	15p	PS	1p	350
*CV11	281-0136-00	3-10p	CT		500
*CV12	281-0145-00	6-25p	CT		500
*C13	283-0653-00	5p	SM	0·5p	350
*CV14	281-0145-00	6-25p	CT		500
C20 & 20A	*283-0653-00	5p	SM	10	350
CV21 & 21A	*281-0132-00	10-40p	CT		500
C22 & 22A	*285-0844-00	39p	PS	2p	350
C23 & 23A	*285-0796-00	0·1	PE	20	250
CV24 & 24A	*281-0156-00	1·4-6·4p	PP		500
CV25 & 25A	*281-0156-00	1·4-6·4p	PP		500
CV26 & 26A	*281-0156-00	1·4-6·4p	PP		500
C27	285-0866-00	10p	PS	1p	350
CV28 & 28A	*281-0135-00	4-20p	CT		250
C29	290-0401-00	25	E		30
C30	285-0843-00	30p	PS	2p	350
C31	290-0386-00	250	E		18
CV32	281-0132-00	10-40p	CT		500
C33	285-0873-00	200p	PS	5	350
C34	285-0873-00	200p	PS	5	350
C35	285-0759-00	2,200p	PS	5	125
C36	285-0854-00	100p	PS	2p	350
C37	285-0854-00	100p	PS	2p	350
C38	290-0434-00	5	E		100
C39	285-0796-00	0·1	PE	20	250
C41	285-0796-00	0·1	PE	20	250
C42	285-0869-00	47p	PS	2p	350
C43	285-0854-00	100p	PS	2p	350
C44	285-0873-00	200p	PS	5	350
C45	285-0866-00	10p	PS	1p	350
C101	285-0772-00	0·1	PE	10	400
C102	285-0779-00	0·47	PE	20	100
C103	285-0779-00	0·47	PE	20	100
C104	285-0906-00	0·015	PE	20	250
C105	281-0678-00	3p	CER	0·1p	500
C106	281-0678-00	3p	CER	0·1p	500
C107	285-0906-00	0·015	PE	20	250
C108	285-0779-00	0·47	PE	20	100
C109	290-0353-00	16	E		32
C111	285-0854-00	100p	PS	2p	350
C112	285-0850-00	1,000p	PS	5	125
C113	285-0854-00	100p	PS	2p	350
C114	290-0354-00	100	E		12
C116	281-0712-00	5p	CER	½p	750
C117	281-0712-00	5p	CER	½p	750

* 2 per instrument

Cct. ref.	Part number	Value	Description	Tol. %	Rating
C118	285-0867-00	20p	PS	1p	350
C119	285-0873-00	200p	PS	5	350
C120	285-0783-00	2,200p	PE	20	400
C121	285-0874-00	470p	PS	5	125
C122	285-0796-00	0·1	PE	20	250
C123	281-0696-00	0·75p	CER	0·1p	500
C124	285-0842-00	15p	PS	1p	350
C276	285-0874-00	470p	PS	5	125
C277	285-0769-00	0·01	PE	20	400
C278	285-0792-00	4,700p	PE	20	125
C279	285-0836-00	0·047	PE	20	250
C280	285-0791-00	0·47	PE	10	125
C281	285-0869-00	47p	PS	2p	350
C282	285-0769-00	0·01	PE	20	400
CV283	281-0137-00	6-30p	CT		350
C284	285-0762-00	450p	PS	1	125
C285	285-0770-00	4,700p	PS	1	125
C286	285-0771-00	0·047	PE	2	63
C287	285-0774-00	0·47	PE	2	63
C288	285-0775-00	4·7	PE	2	63
C289	285-0884-00	29p	PS	1p	350
CV291	281-0137-00	6-30p	CT		350
C301	285-0796-00	0·1	PE	20	250
C302	285-0796-00	0·1	PE	20	250
C303	285-0773-00	0·1	PE	20	400
C304	285-0843-00	30p	PS	2p	350
C305	285-0796-00	0·1	PE	20	250
C306	281-0677-00	0·01	CER		2k
C401	281-0682-00	0·02	CER		2k
C402a	290-0384-00	1,000	E		18
b		1,000	E		18
C403	281-0681-00	0·01	CER		4k
C404	281-0681-00	0·01	CER		4k
C406	281-0681-00	0·01	CER		4k
C407	285-0796-00	0·1	PE	20	250
C408	290-0407-00	640	E		16
C409	290-0364-00	16	E		450
C411	290-0364-00	16	E		450
C412	290-0364-00	16	E		450
C414	290-0400-00	280	E		150
C415	290-0400-00	280	E		150
C470	290-0416-00	400	E		16
C474	290-0416-00	400	E		16
C475	290-0377-00	1,000	E		16
C476	290-0377-00	1,000	E		16
C478	290-0355-00	5	E		64
C479	290-0434-00	5	E		100
C481	285-0874-00	470p	PS	5	125
CRT	154-0542-00		D13-47GH P31 (standard)		
	154-0560-00		D13-47GM P7		
	154-0561-00		D13-47BE P11		
D21	152-0348-00	6·2V	Si zener	5	0·33W
D22	152-0062-01		1N914 Si		

Cct. ref.	Part number	Value	Description	Tol. %	Rating
D23	152-0062-01		1N914 Si		
D24	152-0421-00	3·3V	Si zener	5	0·33W
D25 & 25A	*152-0062-01		1N914 Si		
D26 & 26A	*152-0370-00		AAY30 Ge		
D27 & 27A	*152-0370-00		AAY30 Ge		
D28 & 28A	*152-0062-01		1N914 Si		
D29	152-0062-01		1N914 Si		
D31	152-0062-01		1N914 Si		
D101	152-0062-01		1N914 Si		
D102	152-0062-01		1N914 Si		
D103	152-0062-01		1N914 Si		
D104	152-0062-01		1N914 Si		
D105	152-0370-00		AAY30 Ge		
D106	152-0343-00		1N914T Si		
D107	152-0370-00		AAY30 Ge		
D108	152-0370-00		AAY30 Ge		
D109	152-0062-01		1N914 Si		
D111	152-0062-01		1N914 Si		
D301	152-0344-00	100V	Si zener	10	0·33W
D401	152-0374-00	3·4kV	Se rectifier		0·6mA
D402	152-0339-00	50V	Si rectifier		0·5A
D403	152-0374-00	3·4kV	Se rectifier		0·6mA
D404	152-0352-00	800V	Si rectifier		0·2A
D405	152-0352-00	800V	Si rectifier		0·2A
D406	152-0339-00	50V	Si rectifier		0·5A
D407	152-0352-00	800V	Si rectifier		0·2A
D408	152-0341-00	450V	Si rectifier		0·5A
D409	152-0062-01		1N914 Si		
D411	152-0062-01		1N914 Si		
D412	152-0062-01		1N914 Si		
F401	159-0077-00	0·25A	1¼in delay 200 - 250V		
	159-0079-00	0·5A	1¼in delay 100 - 125V		
FB101	276-0597-00		Ferroxcube bead FX1115 Mullard		
FB102	276-0597-00		Ferroxcube bead FX1115 Mullard		
L452	108-0482-00	160μH	Fixed inductor		
L453	108-0503-01	980Ω	Trace rotation coil (2,400 turn)		
LP401	150-0095-00	14V	LES		0·75W
LP402	150-0095-00	14V	LES		0·75W
LP403	150-0095-00	14V	LES		0·75W
*R1	310-0678-00	10·1k	CM	1	
*R2		990k	CM	1	
*R3	310-0679-00	111k	CM	1	
*R4		900k	CM	1	

* 2 per instrument

Cct. ref.	Part number	Value	Description	Tol. %	Rating
*R5		250k	CM	1	
*R6		800k	CM	1	
*R7	310-0680-00	1M	CM	1	
*R8		500k	CM	1	
*R9	316-0470-00	47	C		
R21 & 21A	*310-0679-00	111k	CM	1	
R22 & 22A		900k	CM	1	
R23 & 23A	*316-0105-01	1M	C		
R24 & 24A	*316-0154-01	150k	C		
R25 & 25A	*316-0561-01	560	C		
R26 & 26A	*316-0224-01	220k	C		
R27 & 27A	*316-0185-01	1·8M	C		
RV28 & 28A	*311-0765-00	100k	CP	20	¼
RV29 & 29A	*311-1028-00	100k	CV	20	¼
R30 & 30A	*316-0101-01	100	C		
R31 & 31A	*316-0681-01	680	C		
RV32 & 32A	*311-0717-00	220	CP	20	¼
R33 & 33A	*316-0681-01	680	C		
RV34 & 34A	*311-0899-00	5k	CV	20	0·125
R35 & 35A	*319-0136-00	680	HS	1	¼
RV36 & 36A	*311-0717-00	220	CP	20	¼
R37 & 37A	*319-0136-00	680	HS	1	¼
R38	316-0123-01	12k	C		
R39	316-0123-01	12k	C		
R41	316-0272-01	2·7k	C		
R42 & 42A	*316-0182-01	1·8k	C		
R43 & 43A	*316-0182-01	1·8k	C		
RV44 & 44A	*311-0894-00	330	CP	20	¼
R45 & 45A	*316-0101-01	100	C		
R46 & 46A	*316-0102-01	1k	C		
R47 & 47A	*316-0102-01	1k	C		
R48 & 48A	*316-0221-01	220	C		
R49 & 49A	*316-0221-01	220	C		
R51 & 51A	*316-0222-01	2·2k	C		
RV52	311-0798-00	2·2k	CP	20	¼
R53	316-0152-01	1·5k	C		
R54	316-0821-01	820	C		
R55	316-0272-01	2·7k	C		
R56	316-0102-01	1k	C		
R57	316-0102-01	1k	C		
R58	303-0512-01	5·1k	C	5	1
R59	303-0512-01	5·1k	C	5	1
R61	303-0911-01	910	C	5	1
R62	316-0271-01	270	C		
R63	316-0271-01	270	C		
RV64	311-0719-00	470	CP	20	¼
R65	303-0222-01	2·2k	C	5	1
R66	316-0151-01	150	C		
R67	316-0151-01	150	C		
R68	303-0222-01	2·2k	C	5	1
R69	303-0122-01	1·2k	C	5	1
R71	321-0844-48	2·2k	MF	1	0·125
R72	321-0306-48	15k	MF	1	0·125
R73	316-0821-01	820	C		

* 2 per instrument

Cct. ref.	Part number	Value	Description	Tol. %	Rating
R74	321-0306-48	15k	MF	1	0·125
R75	321-0844-48	2·2k	MF	1	0·125
R76	321-0306-48	15k	MF	1	0·125
R77	321-0306-48	15k	MF	1	0·125
R78	316-0821-01	820	C		
R79	315-0101-02	100	C	5	¼
R81	315-0332-01	3·3k	C	5	¼
R82	315-0272-01	2·7k	C	5	¼
R83	316-0102-01	1k	C		
R84	316-0392-01	3·9k	C		
R85	316-0561-01	560	C		
R86	315-0102-02	1k	C	5	¼
R87	315-0272-01	2·7k	C	5	¼
R88	315-0272-01	2·7k	C	5	¼
R89	316-0222-01	2.2k	C		
R91	317-0683-01	68k	C	5	0·125
R92	317-0333-01	33k	C	5	0·125
R93	317-0333-01	33k	C	5	0·125
R94	317-0683-01	68k	C	5	0·125
R95	317-0272-01	2·7k	C	5	0·125
R96	317-0123-01	12k	C	5	0·125
R97	317-0823-01	82k	C	5	0·125
R98	317-0272-01	2·7k	C	5	0·125
R99	317-0123-01	12k	C	5	0·125
R101	316-0104-01	100k	C		
R104	316-0392-01	3·9k	C		
R105	316-0333-01	33k	C		
R106	316-0273-01	27k	C		
R107	316-0223-01	22k	C		
R108	316-0823-01	82k	C		
R109	316-0184-01	180k	C		
R111	316-0272-01	2·7k	C		
R112	316-0183-01	18k	C		
R113	316-0272-01	2·7k	C		
RV114	311-0850-00	15k	CP	20	¼
RV115	311-0897-00	10k	CV (with RV142 & S102)	20	¼
RV115R	311-1015-00	10k	CV (with RV142R & S102R)	20	¼
R116	316-0183-01	18k	C		
R117	316-0272-01	2·7k	C		
R118	316-0184-01	180k	C		
R119	316-0823-01	82k	C		
R121	316-0333-01	33k	C		
R122	316-0273-01	27k	C		
R123	316-0223-01	22k	C		
R124	316-0224-01	220k	C		
R125	316-0154-01	150k	C		
R126	316-0393-01	39k	C		
R127	316-0272-01	2·7k	C		
R128	316-0223-01	22k	C		
R129	316-0271-01	270	C		
R130	316-0392-01	3·9k	C		
R131	316-0222-01	2·2k	C		
RV132	311-0717-00	220	CP	20	¼
R133	316-0682-01	6·8k	C		
R134	316-0471-01	470	C		
R135	316-0103-01	10k	C		

Cct. ref.	Part number	Value	Description	Tol. %	Rating
R136	316-0224-01	220k	C		
R137	316-0222-01	2·2k	C		
R138	316-0335-01	3·3M	C		
R141	316-0124-01	120k	C		
RV142	311-0897-00	25k	CV (with RV115 & S102)	20	¼
RV142R	311-1015-00	25k	CV (with RV115R & S102R)	20	¼
R143	316-0273-01	27k	C		
RV144	311-0850-00	15k	CP	20	¼
R145	315-0243-02	24k	C	5	¼
R146	316-0224-01	220k	C		
R147	316-0183-01	18k	C		
R148	316-0821-01	820	C		
RV149	311-0896-00	3·3k	CP	20	¼
R150	316-0101-01	100	C		
R151	316-0122-01	1·2k	C		
R152	316-0103-01	10k	C		
R153	316-0103-01	10k	C		
R154	316-0682-01	6·8k	C		
RV155	311-0719-00	470	CP	20	¼
R156	316-0272-01	2·7k	C		
R157	303-0153-01	15k	C	5	1
R158	316-0331-01	330	C		
RV159	311-0986-00	10k	CP	20	0·1
R161	303-0123-01	12k	C	5	1
R162	319-0091-00	1·5k	HS	1	¼
R163	316-0153-01	15k	C		
R164	303-0103-01	10k	C	5	1
R165	316-0101-01	100	C		
RV166	311-0858-00	5k	CV (with RV169)	20	2
R167	316-0563-01	56k	C		
R168	316-0562-01	5·6k	C		
RV169	311-0858-00	5k	CV (with RV166)	20	1
R170	316-0100-01	10	C		
R171	316-0152-01	1·5k	C		
R172	316-0152-01	1·5k	C		
R173	319-0137-00	1·2k	HS	1	¼
R174	316-0123-01	12k	C		
R175	307-0143-00	5·6k	MO	5	1½
R176	319-0138-00	120	HS	1	¼
R177	316-0561-01	560	C		
RV178	311-0717-00	220	CP	20	¼
R179	307-0143-00	5·6k	MO	5	1½
R181	316-0103-01	10k	C		
RV182	311-0851-00	1k	CP	20	¼
R183	316-0391-01	390	C		
R185	316-0332-01	3·3k	C		
R186	316-0104-01	100k	C		
RV276	311-0853-00	50k	CV	20	¼
R277	316-0823-01	82k	C		
R278	319-0097-00	750k	HS	1	¼
R279	319-0131-00	375k	HS	1	¼
R281	319-0132-00	225k	HS	1	¼
R282	319-0070-01	75k	HS	1	¼
R283	319-0133-00	37·5k	HS	1	¼

Cct. ref.	Part number	Value	Description	Tol. %	Rating
R284	315-0243-02	24k	C	5	¼
R285	315-0752-02	7·5k	C	5	¼
R286	316-0222-01	2·2k	C		
R287	316-0125-01	1·2M	C		
R288	316-0102-01	1k	C		
R289	316-0684-01	680k	C		
R291	315-0363-01	36k	C	5	¼
R292	319-0133-00	37·5k	HS	1	¼
R293	316-0105-01	1M	C		
RV300	311-0765-00	100k	CP	20	¼
RV301	311-0854-00	100k	CV	20	0·1
RV301R	311-0907-00	100k	CV	20	¼
R302	316-0155-01	1.5M	C		
RV303	311-0914-00	1M	CV (with RV305 & S402)	20	¼
RV303R	311-1012-00	1M	CV	20	¼
R304	316-0334-01	330k	C		
RV305	311-0914-00	1M	CV (with RV303 & S402)	20	¼
RV305R	311-1020-00	1M	CV (with S402R)	20	¼
R306	316-0334-01	330k	C		
R307	316-0105-01	1M	C		
R308	316-0106-01	10M	C		
RV401	311-0961-00	100	CV (with RV465)	20	1
RV401R	311-1011-00	100	WWV	20	1·6
R402	316-0473-01	47k	C		
R403	316-0684-01	680k	C		
R404	316-0470-01	47	C		
R405	303-0151-01	150	C	5	1
R406	316-0121-01	120	C		
R421	303-0151-01	150	C	5	1
R459	316-0680-01	68	C		
R461	316-0220-01	22	C		
R462	303-0181-01	180	C	5	1
R463	316-0122-01	1·2k	C		
R464	316-0271-01	270	C		
RV465	311-0961-00	1k	CV (with RV401)	20	1
RV465R	311-1014-00	1k	WWP	20	1·6
R466	316-0100-01	10	C		
R467	319-0042-01	1k	HS	1	¼
R468	319-0082-00	91k	HS	1	¼
RV469	311-0756-00	47k	CP	20	¼
*S1	260-1136-00		Slide (3-position)		
*S2	260-1051-01		Rotary (12-position)		
S21	260-1106-00		Push (1-button)		
S22	260-1106-00		Push (1-button)		
S23	260-1082-00		Slide (2-position)		
S24	260-1089-00		Push (2-button)		
S101	260-0994-00		Push (5-button)		
S102	311-0897-00		Rotary (with RV115 & 142)		
S102R	311-1015-00		Rotary (with RV115R & 142R		
S276	260-1074-00		Rotary (23-position)		
S402	311-0914-00		Rotary (with RV303 & 305)		
S402R	311-1020-00		Rotary (with RV305R)		
T401	120-0593-00		Power transformer		

* 2 per instrument

Cct. ref.	Part number	Description		
TR21 & 21A	*151-0127-02	BSX20/2N2369	Mullard	Si
TR22 & 23	151-0264-01	2BFW0264	Mullard	Si
TR22A & 23A	151-0264-01	2BFW0264	Mullard	Si
TR24 & 24A	*151-0127-02	BSX20/2N2369	Mullard	Si
TR25 & 25A	*151-0127-02	BSX20/2N2369	Mullard	Si
TR26 & 26A	*151-0242-00	SPS2506	Motorola	Si
TR27 & 27A	*151-0242-00	SPS2506	Motorola	Si
TR28	151-0127-02	BSX20/2N2369	Mullard	Si
TR29	151-0127-02	BSX20/2N2369	Mullard	Si
TR31	151-0242-00	SPS2506	Motorola	Si
TR32	151-0242-00	SPS2506	Motorola	Si
TR33	151-0242-00	SPS2506	Motorola	Si
TR34	151-0242-00	SPS2506	Motorola	Si
TR35	151-0127-02	BSX20/2N2369	Mullard	Si
TR36	151-0242-00	SPS2506	Motorola	Si
TR37	151-0244-00	MPS3702	Motorola	Si
TR38	151-0244-00	MPS3702	Motorola	Si
TR39	151-0244-00	MPS3702	Motorola	Si
TR41	151-0244-00	MPS3702	Motorola	Si
TR101	151-0320-00	MPS6518	Motorola	Si
TR102	151-0320-00	MPS6518	Motorola	Si
TR103	151-0320-00	MPS6518	Motorola	Si
TR104	151-0320-00	MPS6518	Motorola	Si
TR105	151-0320-00	MPS6518	Motorola	Si
TR106	151-0320-00	MPS6518	Motorola	Si
TR107	151-0265-00	BFW0265	Mullard	Si
TR108	151-0242-00	SPS2506	Motorola	Si
TR109	151-0257-00	2N1990U	C.S.F.	Si
TR111	151-0257-00	2N1990U	C.S.F.	Si
TR112	151-0127-02	BSX20/2N2369	Mullard	Si
TR113	151-0257-00	2N1990U	C.S.F.	Si
TR114	151-0257-00	2N1990U	C.S.F.	Si
TR115	151-0257-00	2N1990U	C.S.F.	Si

ACCESSORIES

Description	D54 Qty.	D54 Part number	D54R Qty.	D54R Part number
Carton, packing	1	004-0760-00	1	004-0740-00
Connector, BNC male 50Ω	2	131-0649-00	2	same
Key, 4BA socket-head screw	1	003-0617-00	1	same
Manual	1	070-0989-01	1	same

MECHANICAL PARTS

Description	D54 Qty.	D54 Part number	D54R Qty.	D54R Part number
Board, timebase and power supply PC70D wired, less transistors	1	670-0777-00	1	670-0777-01
Board, attenuator PC73 wired	2	670-0799-00	2	same
Board, vertical amplifier PC79 wired, less transistors	1	670-0787-00	1	same
Board, channel trigger selector PC85 wired	1	670-0788-01	1	same
Cabinet side	2	390-0092-00	-	—
Cable power plastic, brown-blue-green/yellow (standard)	1	161-0059-00	1	same
Cable power rubber, red-black-green	1	161-0054-00	1	same
Cable power plastic, black-white-green (with plug)	1	161-0051-00	1	same
Clamp, handle holding	2	343-0212-00	-	—
Connector, BNC female 50Ω	2	131-0651-00	2	same
Connector, CRT PDA button	1	131-0644-00	1	same
Contact assembly, probe test	1	129-0228-01	1	same
Cover bottom	1	200-1039-00	1	386-1745-00
Cover, graticule	1	200-0980-02	1	200-0980-03
Cover, rear	1	200-0947-00	-	—
Cover, top	-	—	1	200-1090-00
Filter, green for P31 (standard)	1	378-0593-00	1	378-0672-00
Filter, amber for P7	1	378-0598-00	1	378-0673-00
Filter, blue for P11	1	378-0599-00	1	378-0674-00
Foot, front	2	348-0169-01	-	—
Foot, rear	2	348-0168-01	-	—
Graticule	1	331-0265-00	1	same
Handle	1	367-0101-01	2	367-0096-00
Holder, fuse	1	352-0153-00	1	same
Knob, black: Time/cm, Volts/cm	3	366-1067-00	3	same
Knob, red: Brilliance, Scale illum	2	366-1069-00	-	—
Trigger level, Position (horizontal)	2	366-1069-00	2	same
Knob, black: Focus, Trace rotation	2	366-1071-00	-	—
Gain (horizontal), Stability	2	366-1071-00	2	same
Knob, red: Variable T/cm, V/cm	3	366-1072-00	3	same
Knob, black: Position (vertical)	2	366-1074-00	2	same
Astig, Brilliance, Focus, Scale illum	-	—	4	366-1074-00
Knob, black: Channel and trigger selector	9	366-1079-00	9	same
Nut, knurled graticule cover	4	220-0513-00	4	same
Nut, slotted potentiometer trim	2	220-0527-00	6	same
Panel, front	1	333-1235-01	1	333-1301-02
Panel, rear label	1	333-1238-01	1	same
Plug, supply voltage selector	1	134-0102-00	1	same
Plug, trace rotation coil	1	134-0100-00	1	same
Screen, mumetal CRT	1	337-1362-00	1	same
Screw, socket-head 4BA:				
3/16in for 366-1067-00	6	213-0208-00	6	same
1/8in for 366-1069-00, -1072-00, -1074-00	9	213-0196-00	11	same
Screw, slotted head 4BA:				
3/16in for 366-1071-00	4	213-0255-00	2	same
Shield, graticule locating	1	337-1057-00	1	same
Socket, CRT B12F	1	136-0302-00	1	same
Socket, power-on-lamp	1	136-0311-00	1	same
Socket, rear 4mm.	1	136-0289-00	1	same
Socket, transistor TO-5: TR109, 111, 113-115	5	136-0317-00	5	same
Socket, transistor TO-18: TR21, 21A, 24-106, 108,112	28	136-0343-00	28	same
Socket, FET TO-18: TR22-23A, 107	5	136-0344-00	5	same
Socket, supply voltage selector	1	136-0315-00	1	same
Spring, graticule lamp holding	2	214-1418-00	2	same
Terminal assembly, black	5	131-0654-00	5	same
Trim, chrome band	2	101-0016-00	-	—

MISC	S1	S2	S2	S2	
C	3 1		6	CV8 CV11 CV12	CV14
CV	CV2	CV4	CV5 CV7	9	13
R	9 1 2		3 4	5 6	7 8

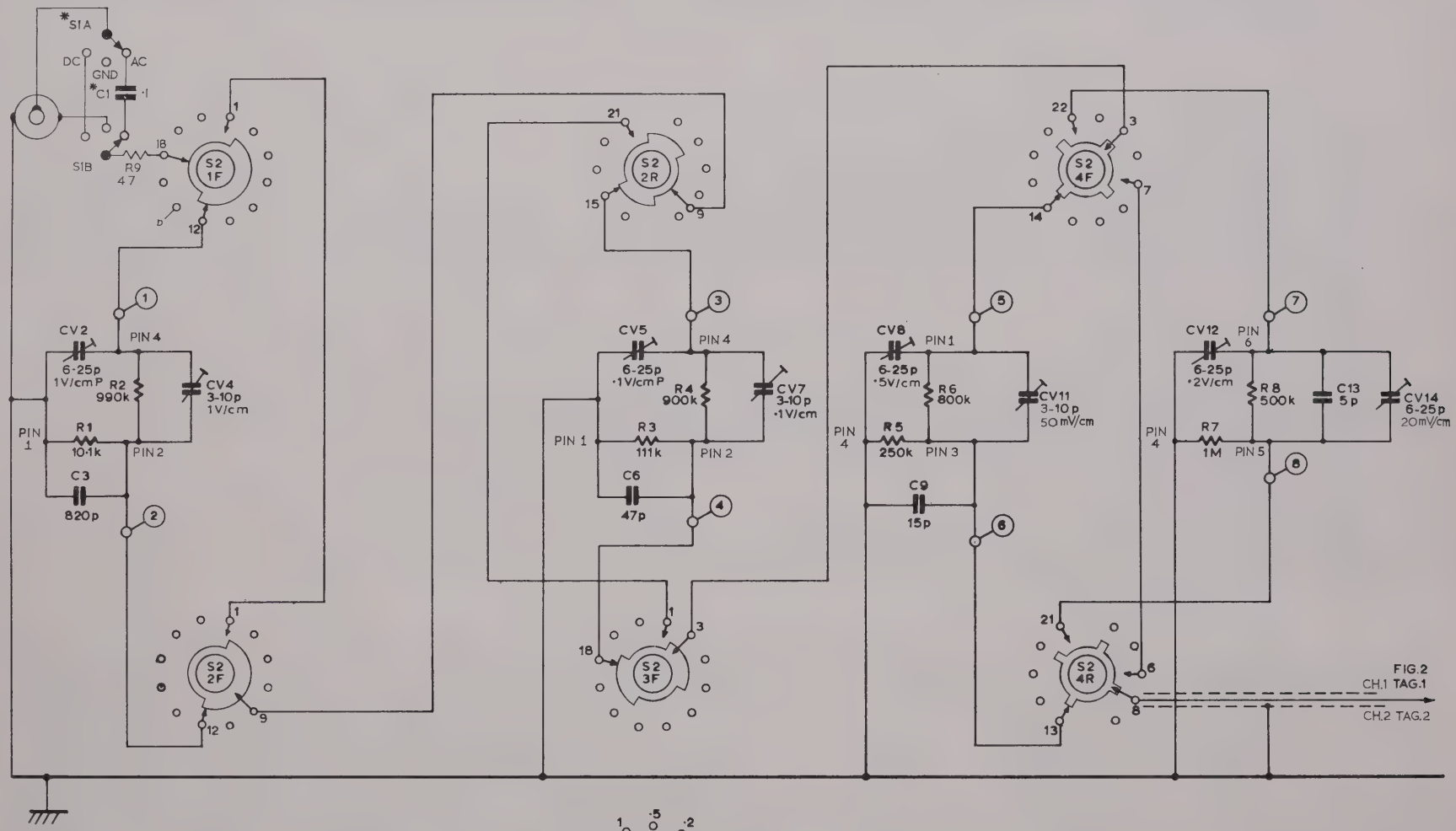

NOTES:-

1. (N°) DENOTES TAG NOS. ON P.C.73
2. SWITCHES SHOWN IN FULLY ANTI-CLOCKWISE POSITION
3. * DENOTES COMPONENTS NOT MOUNTED ON P.C. 73

S 2 (VOLTS/CM) SWITCH POSITIONS

ATTENUATOR CIRCUIT FIG. 1

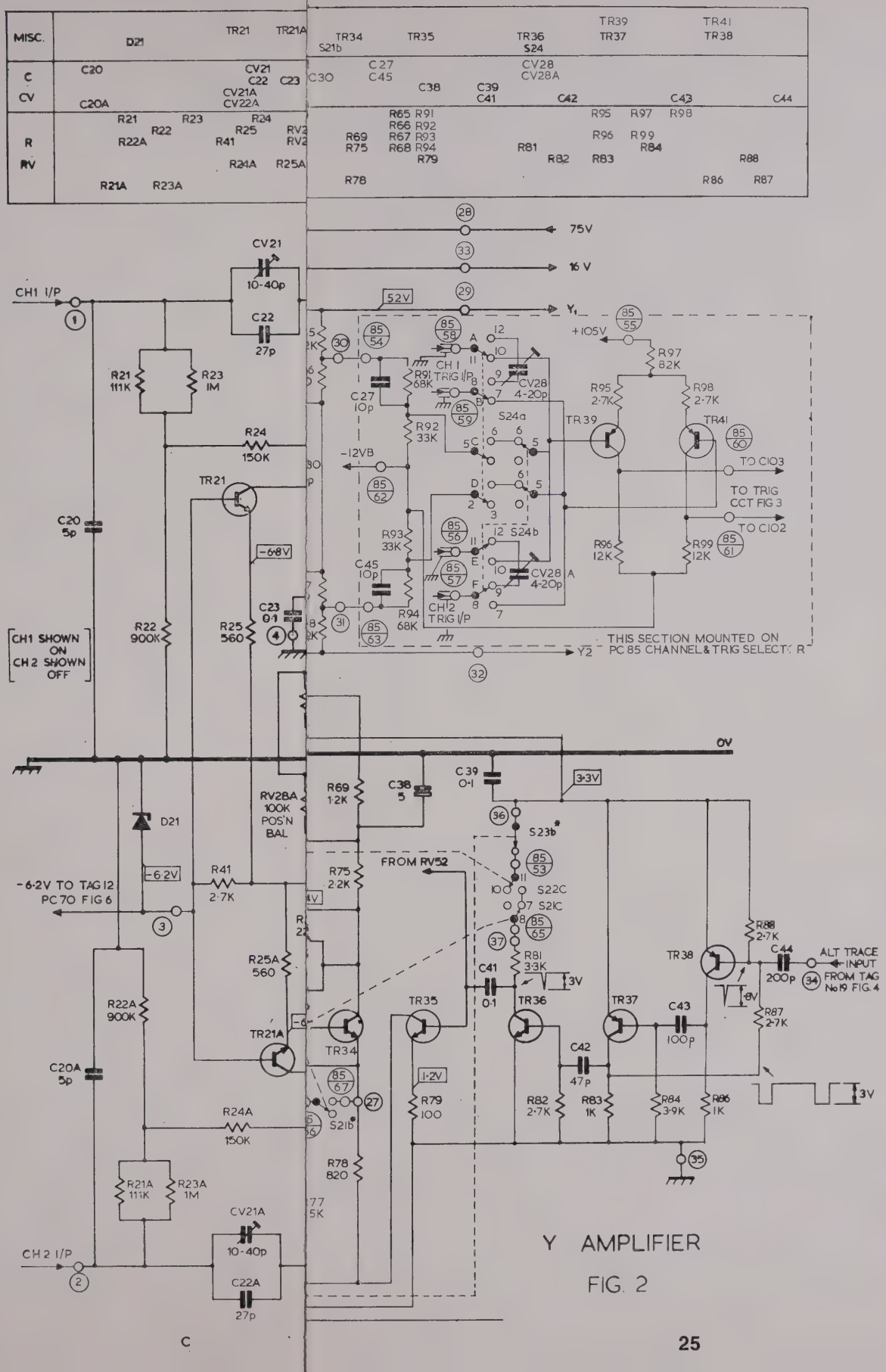
MISC.
D21
TR21
TR21A
TR34
S21b
TR35
TR36
S24
TR39
TR37
TR41
TR38
C
CV
C20
CV21
C22
C23
C20A
CV21A
CV22A
C30
C27
C45
C38
C39
C41
CV28
CV28A
C42
C43
C44
R
RV
R21
R23
R24
R22
R25
RV3
RV2
R22A
R41
R24A
R25A
R21A
R23A
R65 R91
R66 R92
R69
R75
R67 R93
R68 R94
R79
R81
R82
R83
R95
R97
R98
R96
R99
R84
R88
R78
R86
R87
28
75V
33
16 V
29
52V
Y1
CH1 I/P
1
CV21
10-40p
C22
27p
R21
111K
R23
1M
R24
150K
TR21
C20
5p
-6·8V
C23
0·1
R22
900K
R25
560
4
CH1 SHOWN ON
CH2 SHOWN OFF
85/54
85/58
85/59
85/62
85/56
85/57
85/63
CH1 TRIG I/P
R91
68K
C27
10p
R92
33K
S24a
-12VB
R93
33K
C45
10p
CH2 TRIG I/P
R94
68K
S24b
CV28
4-20p
CV28A
4-20p
+10·5V
85/55
R97
82K
R95
2·7K
R98
2·7K
TR39
TR41
85/60
TO CIO3
TO TRIG CCT FIG 3
TO CIO2
R96
12K
R99
12K
85/61
THIS SECTION MOUNTED ON PC 85 CHANNEL & TRIG SELECTOR
Y2
32
0V
C39
0·1
3·3V
RV28A
100K
POS'N
BAL
R69
1·2K
C38
5
36
S23b
85/53
S22C
S21C
FROM RV52
D21
-6·2V
R41
2·7K
-6·2V TO TAG 12
PC 70 FIG 6
3
R75
2·2K
85/65
37
R81
3·3K
3V
C41
0·1
R88
2·7K
TR38
C44
200p
ALT TRACE INPUT
34
FROM TAG No 19 FIG 4
8V
R87
2·7K
R25A
560
R22A
900K
TR21A
TR34
TR35
TR36
TR37
C43
100p
C20A
5p
C42
47p
85/67
27
1·2V
R79
100
S21b
R82
2·7K
R83
1K
R84
3·9K
R86
1K
3V
R24A
150K
R78
820
35
R21A
111K
R23A
1M
CV21A
10-40p
CH2 I/P
2
C22A
27p
Y AMPLIFIER
FIG. 2

MISC	S1	S2	S2	S2								
C	3 1		6			CV8		CV11		CV12		CV14
CV	CV 2	CV4	CV5	CV7		9					13	
R	1 9 2		3	4		5	6			7	8	

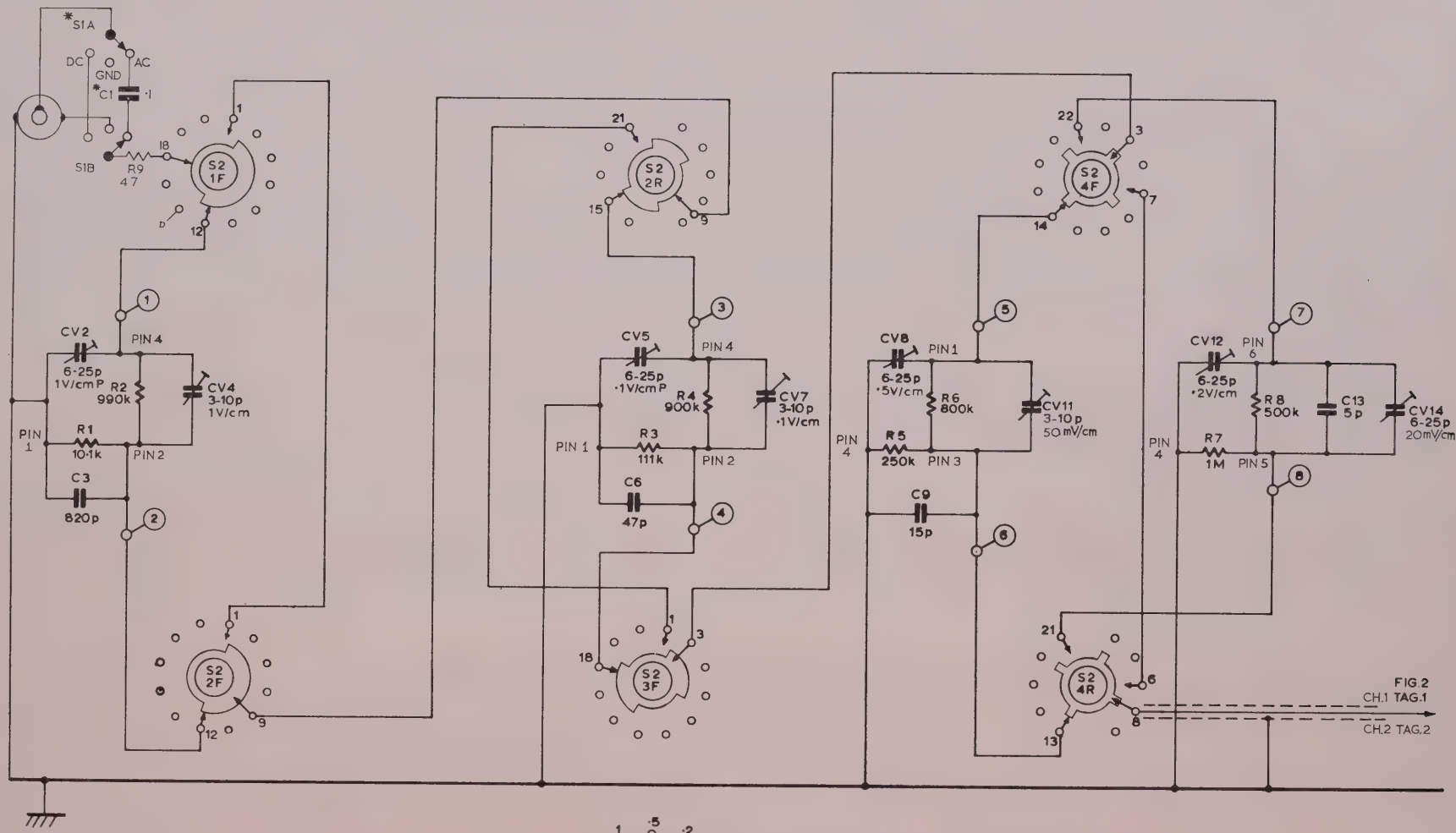

NOTES:-

1. (N°) DENOTES TAG NOS. ON P.C.73
2. SWITCHES SHOWN IN FULLY ANTI-CLOCKWISE POSITION
3. * DENOTES COMPONENTS NOT MOUNTED ON P.C. 73

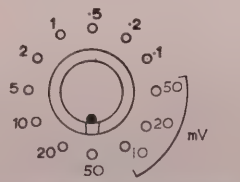

S 2 (VOLTS/CM) SWITCH POSITIONS

ATTENUATOR CIRCUIT FIG. 1

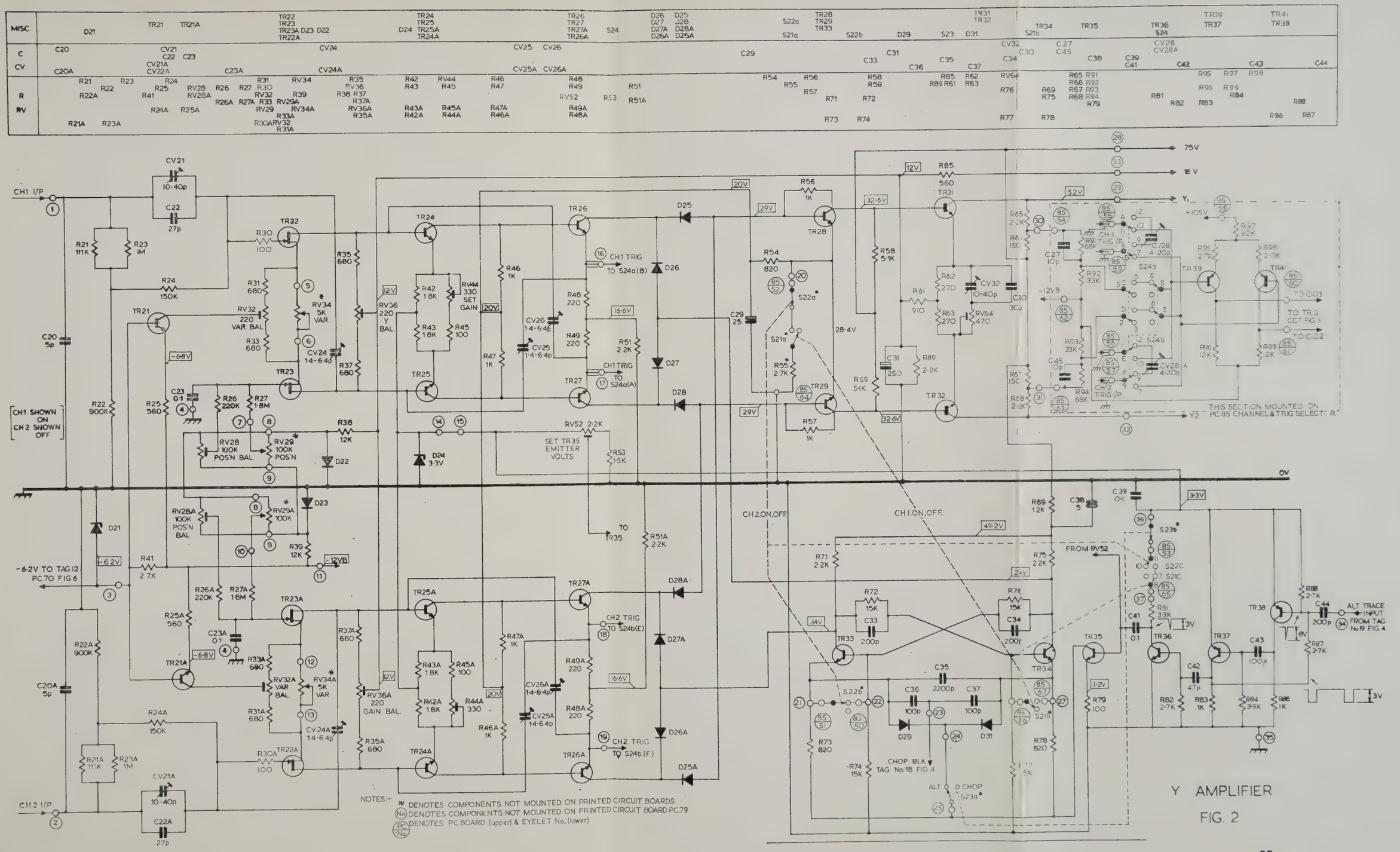

Y AMPLIFIER

FIG. 2

MISC.	S101e	S101d S102a	TR101	TR102	S101d S102b	S101a	TR103	S101c	TR104	D101
C.CV	101 102 103	104	105 106	107	108	109	112 111	114 113		
R RV	101 104 105 106 107 108 109 111 116 RV114 113 RV115 112 117 118 119 121 122 123 127 124 126 125 128 129 130 131 RV132 133 134 135 136 137 138									

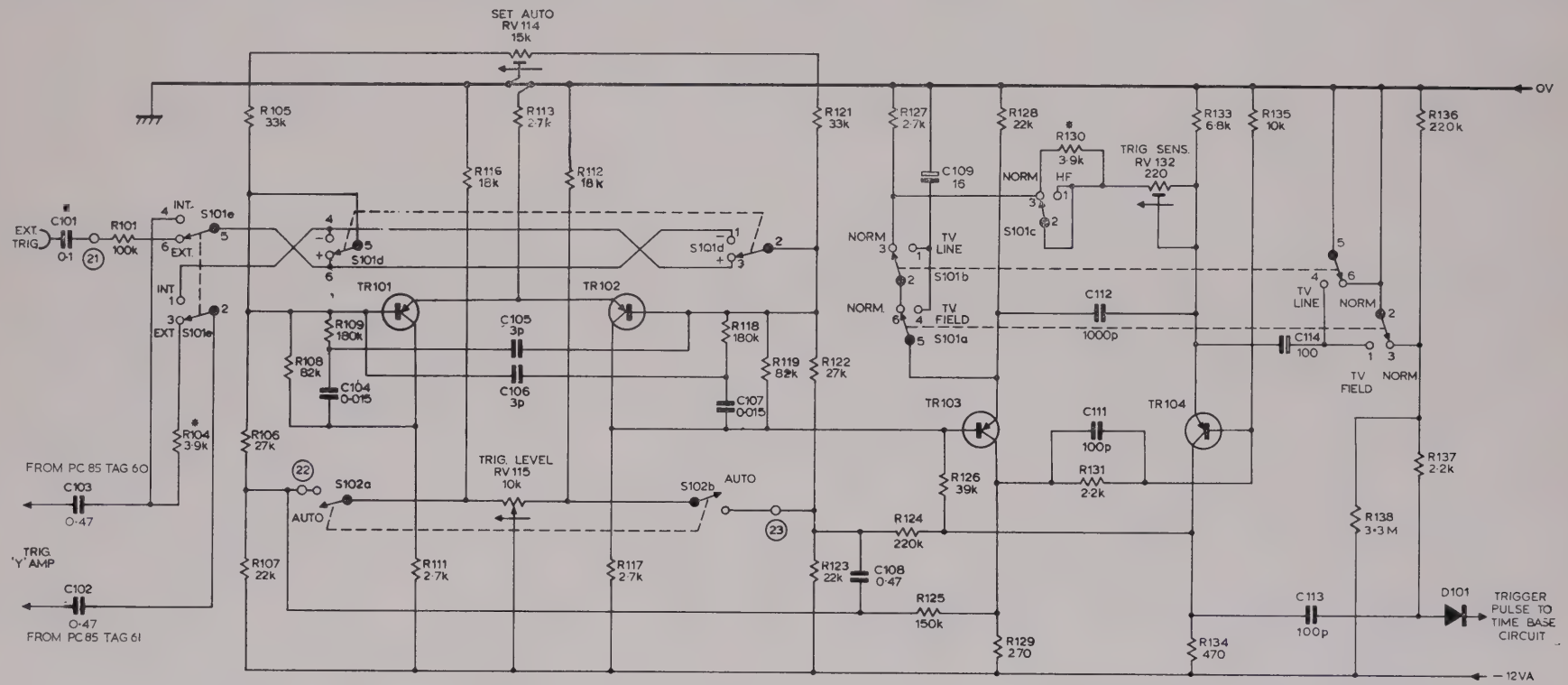

NOTES:-

1. * DENOTES COMPONENTS NOT MOUNTED ON PRINTED CIRCUIT BOARD P.C.70.
2. (No.) DENOTES TAG NUMBERS ON PRINTED CIRCUIT BOARD P.C.70.
3. S101 a-e SHOWN IN THE OUT POSITION
4. ARROWS → ON POTENTIOMETERS INDICATE CLOCKWISE SENSE OF CONTROL

TRIG. SELECTOR OUT	IN	
NORMAL	TV FIELD	S101 a
	TV LINE	S101 b
	HF	S101 c
+	−	S101 d
EXT. TRIG.	INT	S101 e

PUSH BUTTON SWITCH (LOOKING AT COPPER SIDE OF BOARD)

TRIGGER CIRCUIT

FIG. 3.

MISC.	D102	TR105	D103	D104	TR106	D106	D105	TR107	TR108	D107	D111	TR115	TR109	TR111	D108	TR112	D109	TR113	TR114	FB102
C CV			116	117				118								C122			119	120
R RV	141 RV142	143 RV144 145	146 147	148 RV149	151 152	153	154	150	RV155 156	157 185	158	161 186	162 RV159	164 165 163	167 168 RV166	171 172 RV169	173 174	175 170	176 177 RV178	179	181 RV182 183

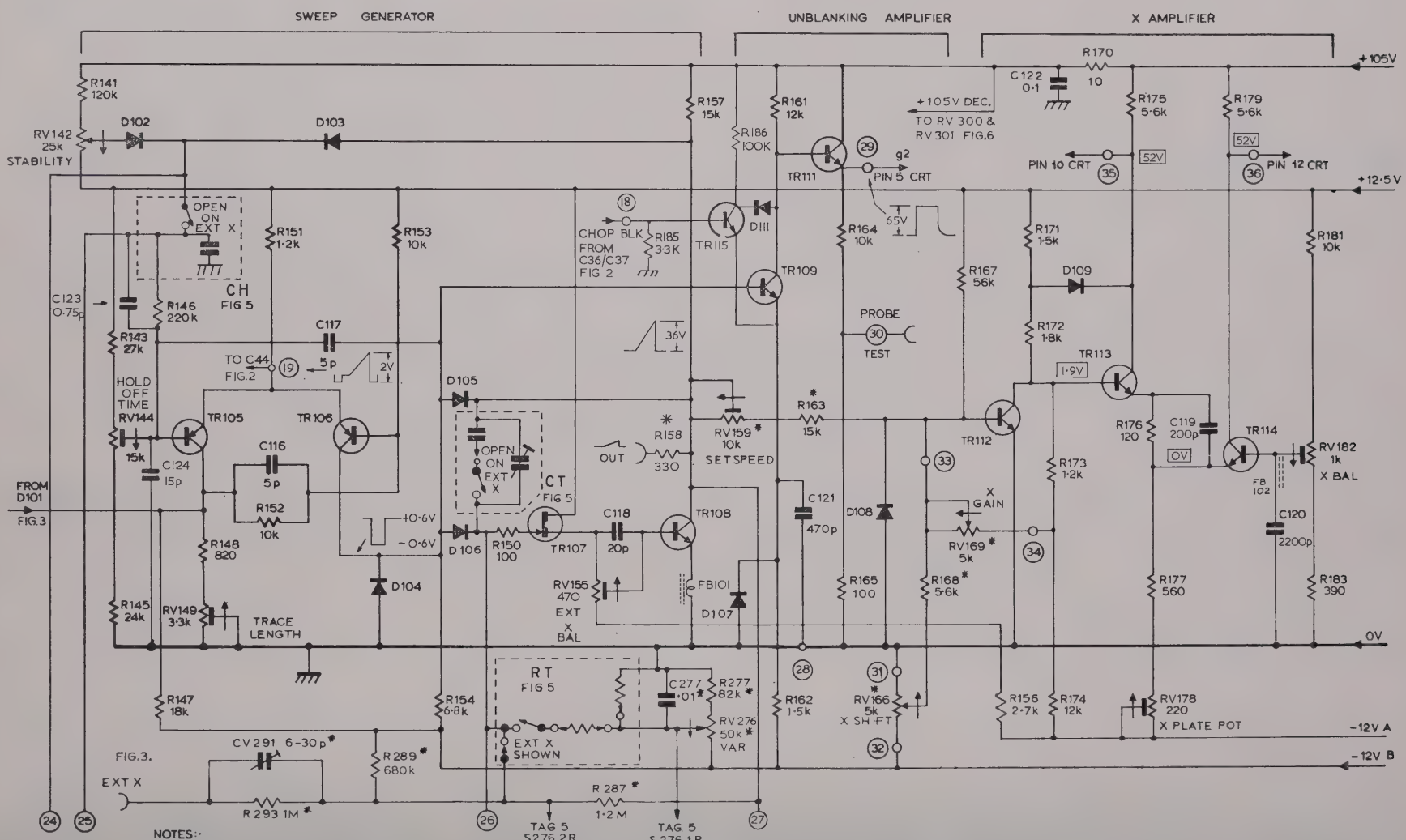

NOTES:-

1 (No) DENOTES TAG No ON P.C.70

2 * DENOTES COMPONENTS NOT MOUNTED ON P.C.70

TIMEBASE CIRCUIT

FIG.4

MISC	S276
C CV	276 277 278 279 280 281 284 285 286 287 CV283 288 289 282
R RV	278 279 281 283 R282 284 285 286 288 291 292

TIME / CM SWITCH POSITIONS

NOTES:-

1. (N.) DENOTES TAG Nos. ON P.C. 70.
2. S 276 SHOWN IN FULLY ANTI-CLOCKWISE POSITION WAFERS VIEWED FROM FRONT.

TIME / CM SWITCH FIG. 5

MISC	F401 S402	T401	D401 LP403 D402	D403 D404	D409 D412 D411	D405 LP401	D406 LP402 D407	D408 L452	D301	L453
C		401	402 403	404	405 475	481 406	407 478	409 411 408 412	414 470 476	474 415	301	302	303	304 305	479 306
R															
RV			RV 401 R421	403 402 404 467	468	RV469	461	406	459 405	RV 301 RV 300	302 462 RV 303	RV 305 463 RV 465 304 306 464 307	466	308

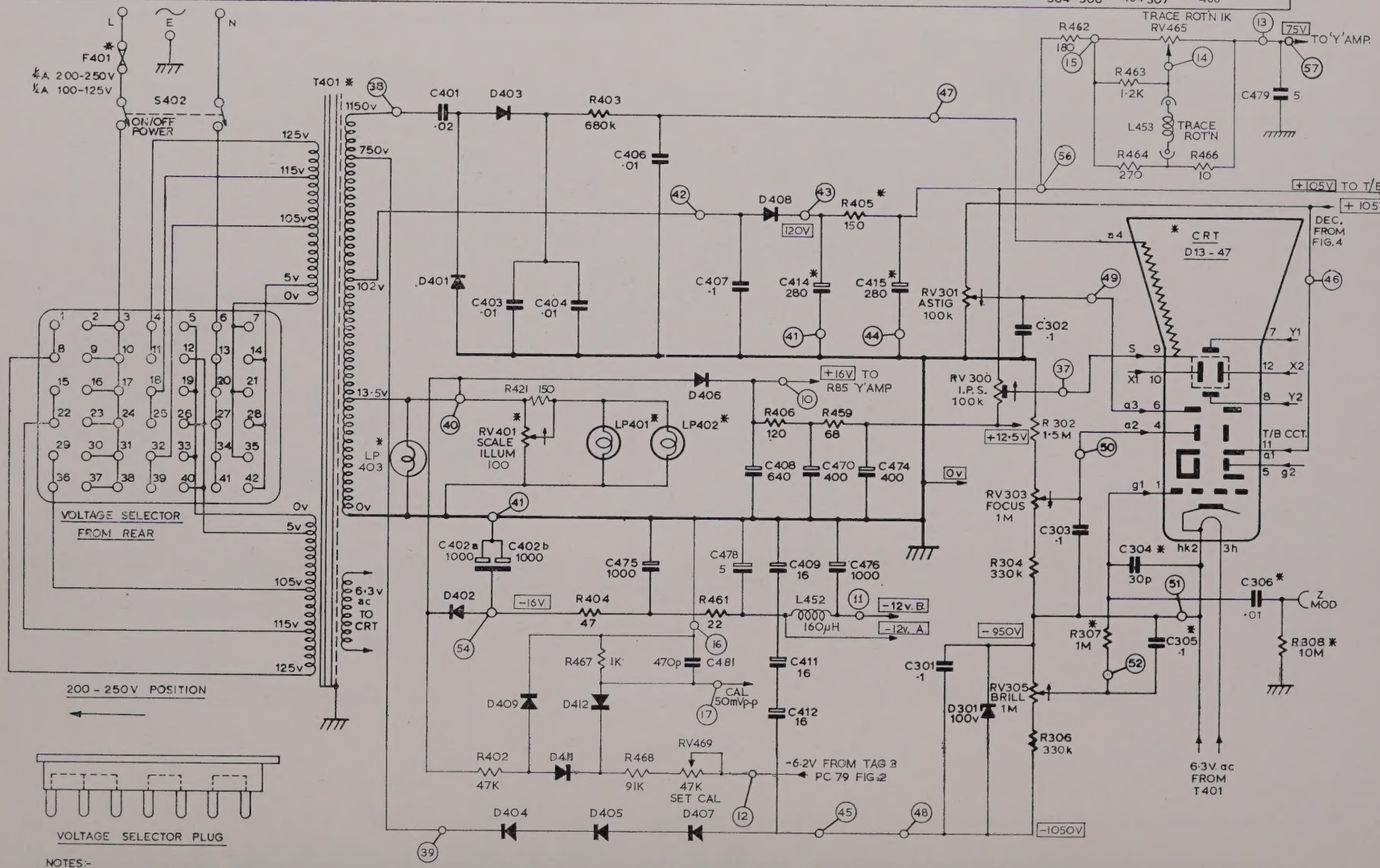

NOTES:-

1. (No) DENOTES TAG NUMBERS ON P.C.70
2. * DENOTES COMPONENTS NOT MOUNTED ON P.C.70

POWER SUPPLY & CRT CIRCUIT FIG. 6

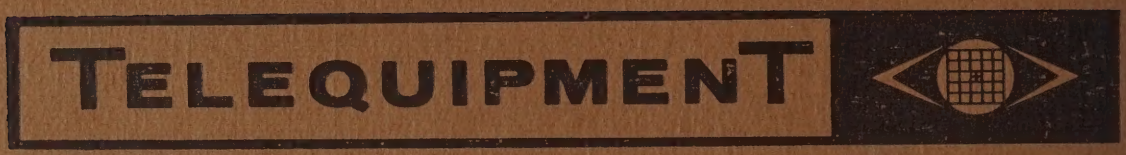

Printed by Henry G. Morris & Co. Ltd., Lammas Road, Leyton, London, E.10